AHIRE MACHINE TOOLS PVT.LTD.

Productivity Improvement Solutions

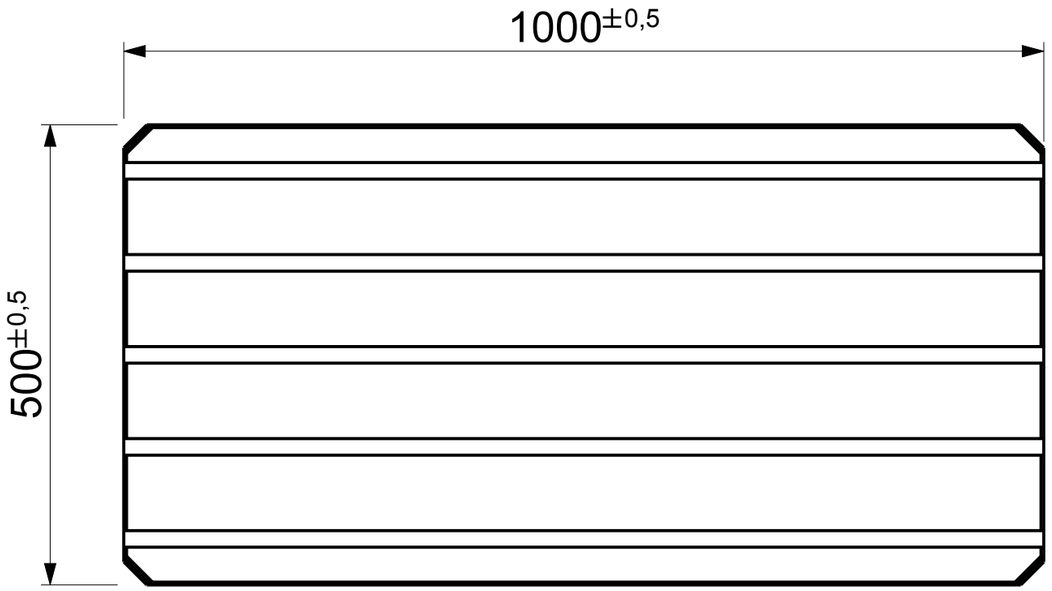

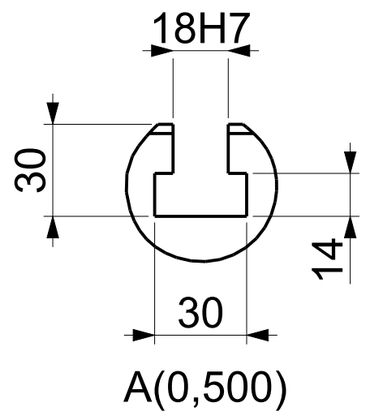

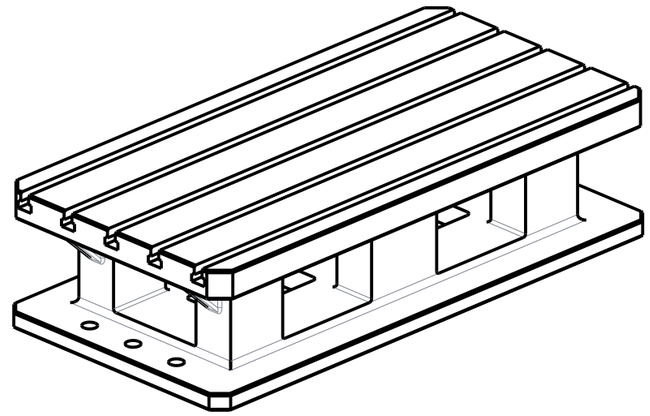

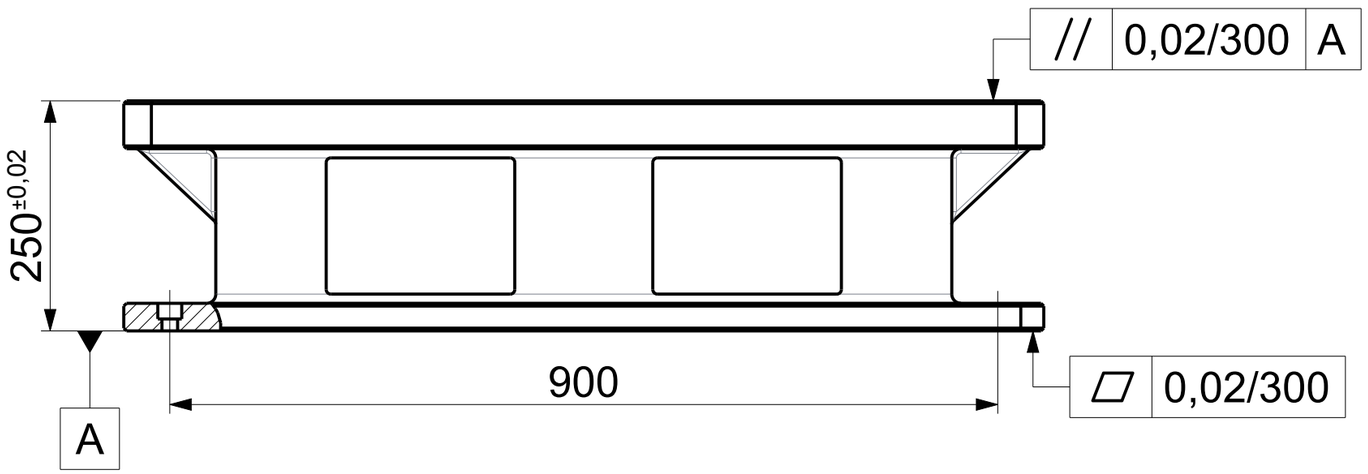

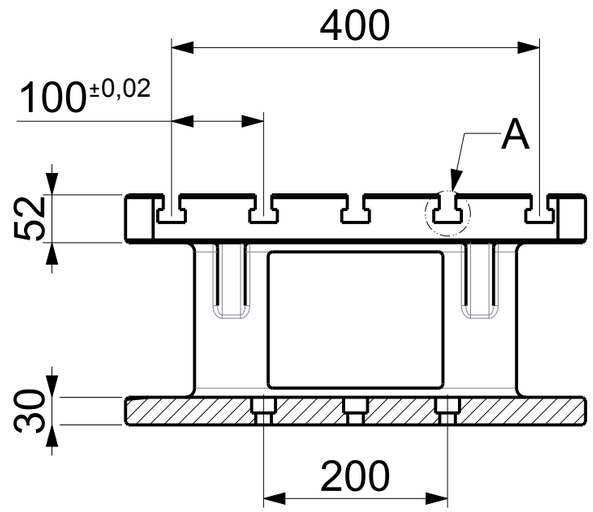

RISER TABLE - T SLOT

Art.No. FG/WH/RISTL/TSL18NP005

Model No. RTT/RT/1000500/250-18

Corp.off.D-1/18, MIDC Ambad, Nashik, Maharashtra, India - 422010.
Works: Phoenix Industrial Park, Shed No.E, Gate no.47, Mauje Wasali, Nashik.