AHIRE MACHINE TOOLS PVT.LTD.

Productivity Improvement Solutions

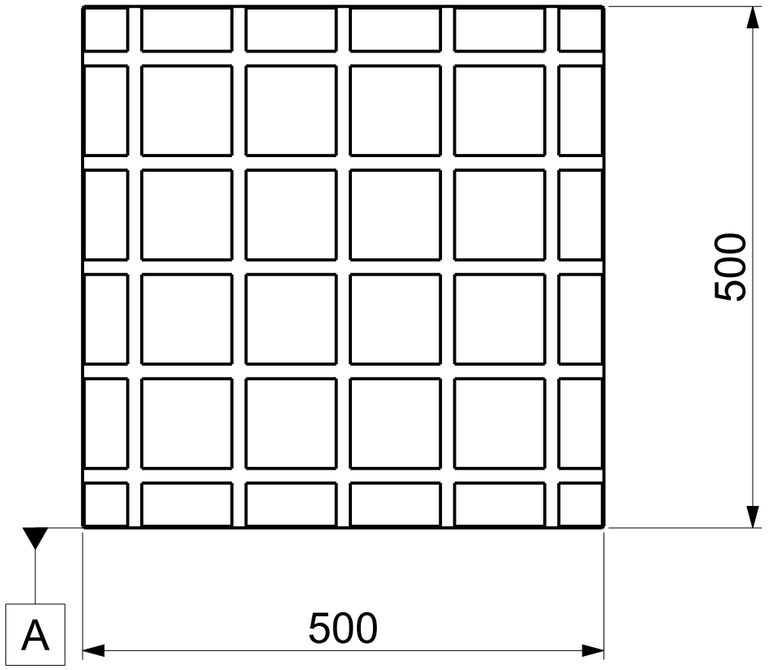

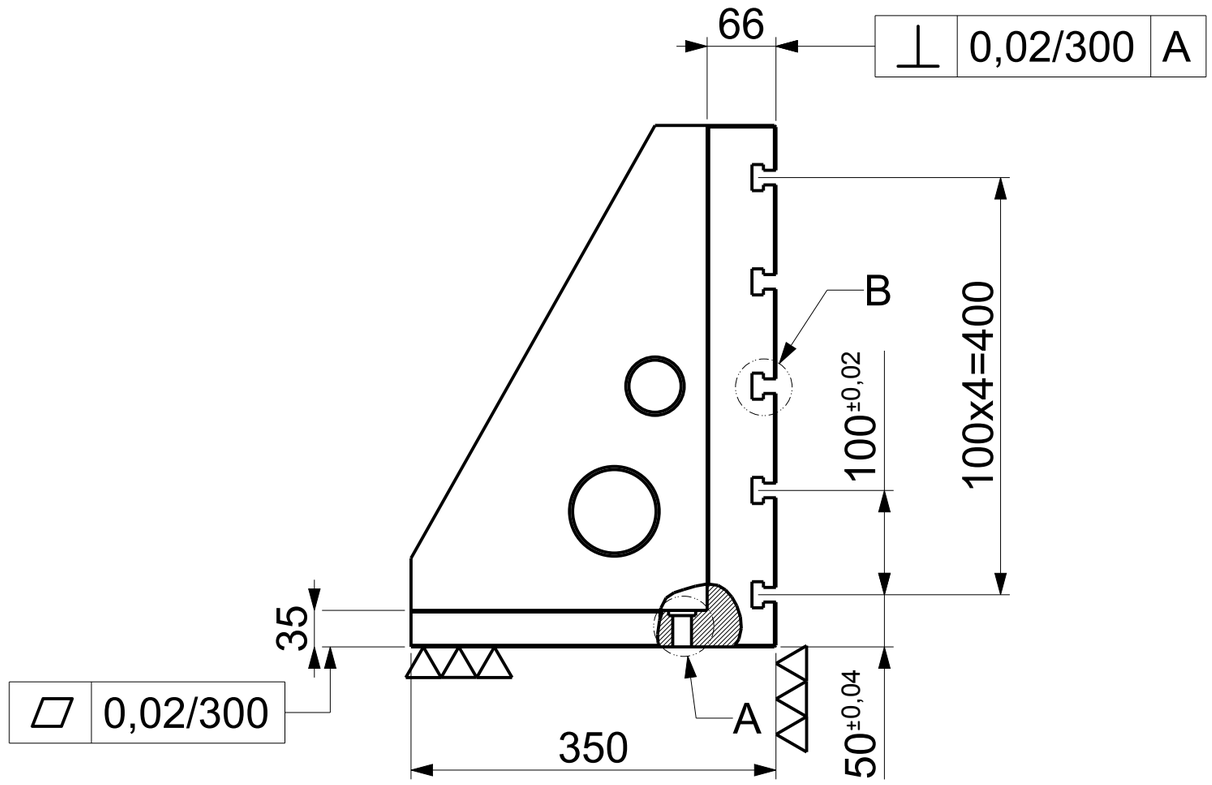

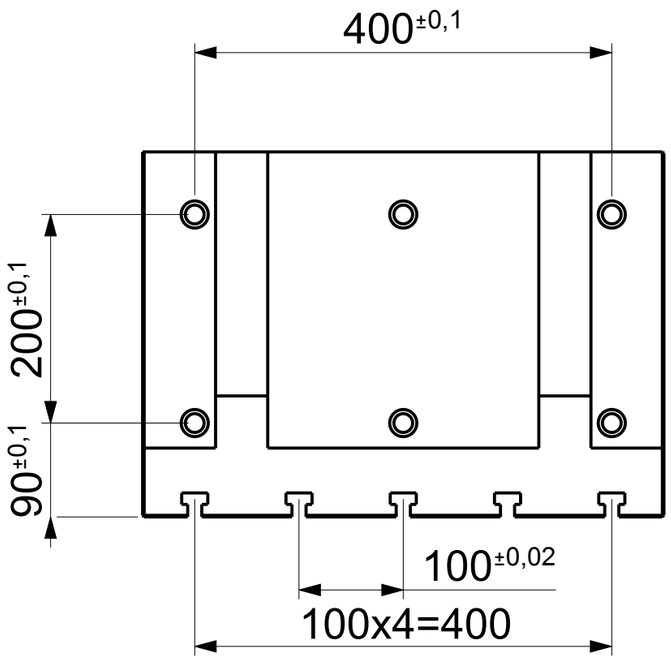

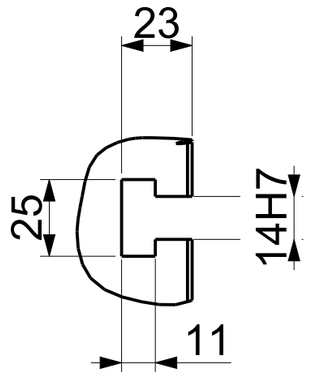

B(0,500)

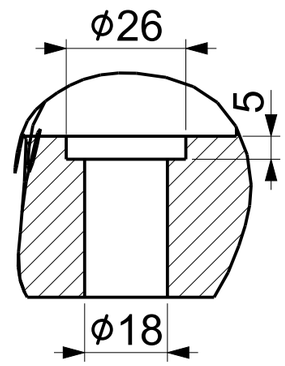

A(0,750)

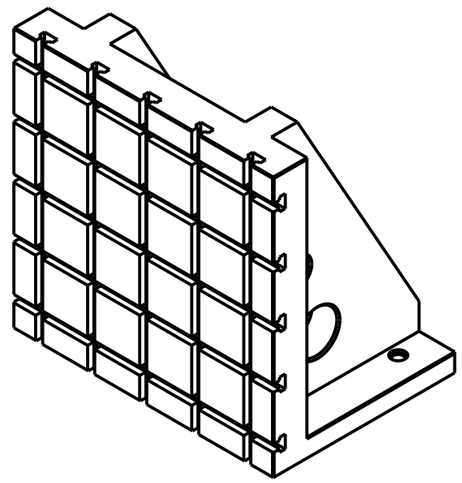

ANGLE PLATE - T SLOT

Art.No.FG/WH/ANGPL/ANT14NP002

Model No. APT/SQ/500500-14

Corp.off.D-1/18, MIDC Ambad, Nashik, Maharashtra, India - 422010.
Works: Phoenix Industrial Park, Shed No.E, Gate no.47, Mauje Wasali, Nashik.