AHIRE MACHINE TOOLS PVT.LTD.

Productivity Improvement Solutions

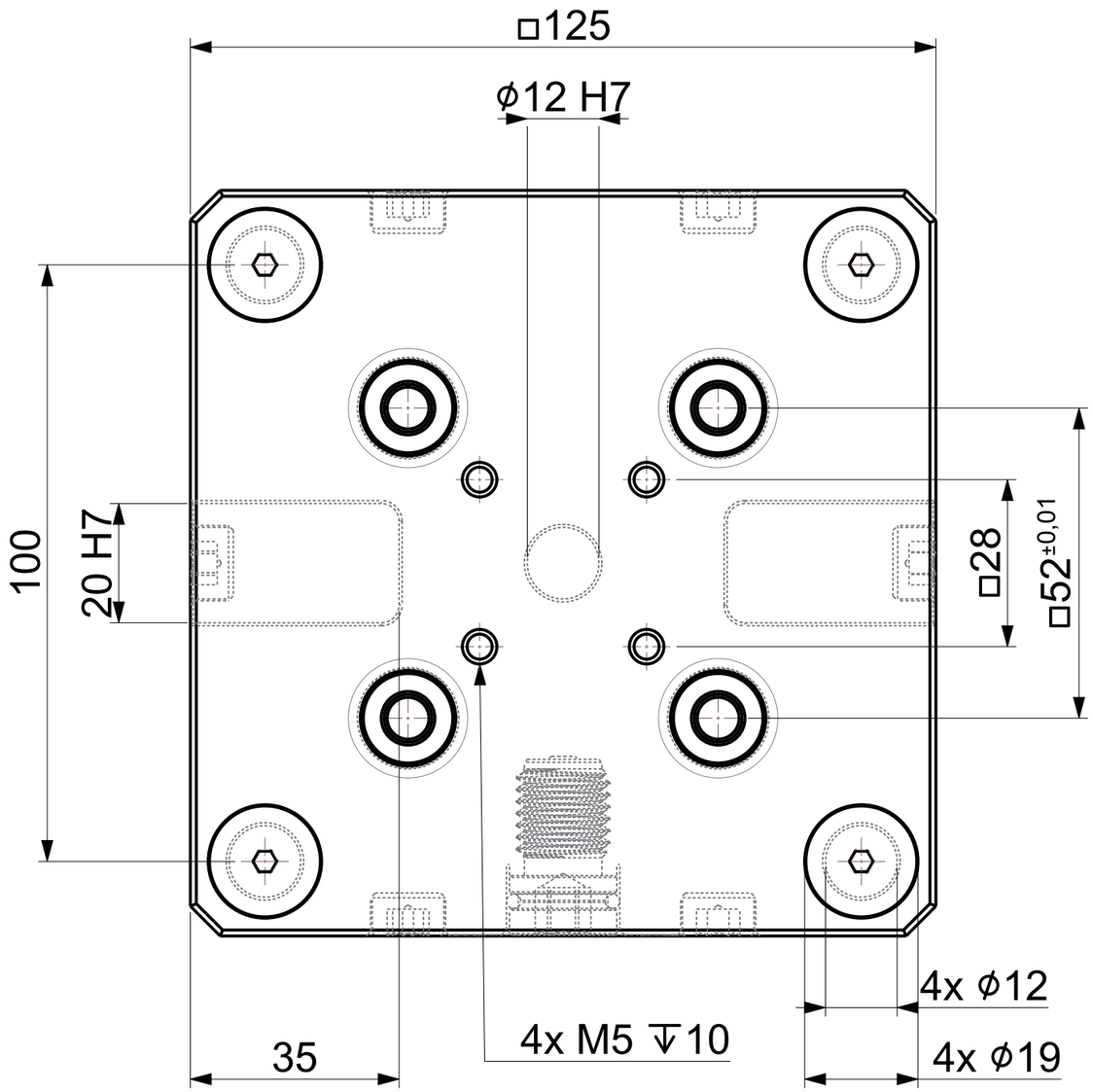

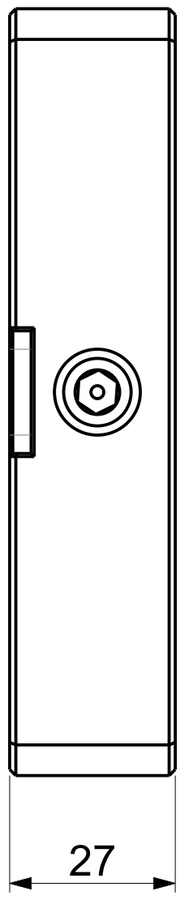

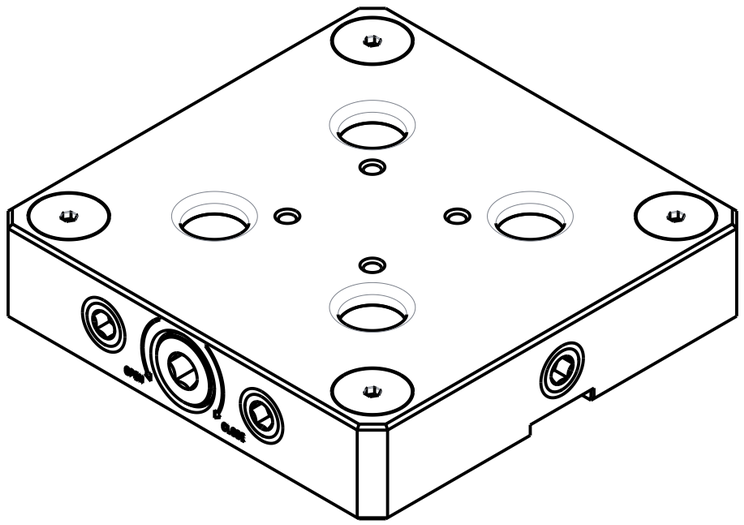

ZPS 52-125, SINGLE PLATE

Art.No. TI/WH/52ZPS/0S125NP001

Model No. ZPS52/SQ/S125

Corp.off.D-1/18, MIDC Ambad, Nashik, Maharashtra, India - 422010.
Works: Phoenix Industrial Park, Shed No.E, Gate no.47, Mauje Wasali, Nashik.