AHIRE MACHINE TOOLS PVT.LTD.

Productivity Improvement Solutions

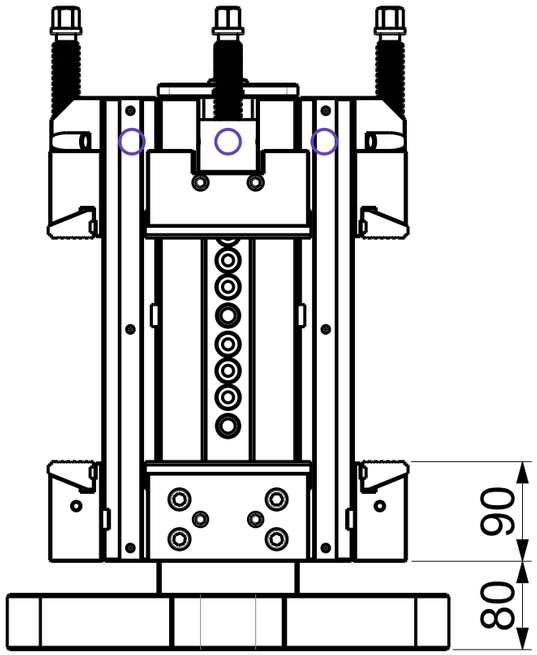

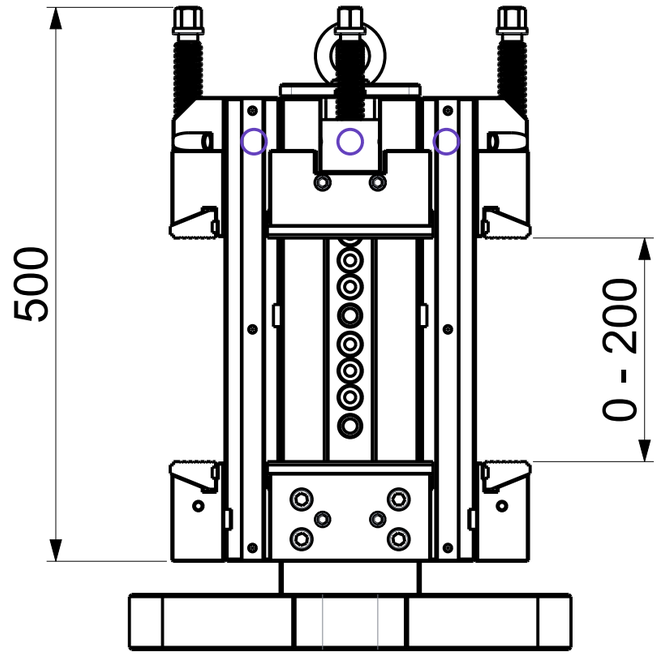

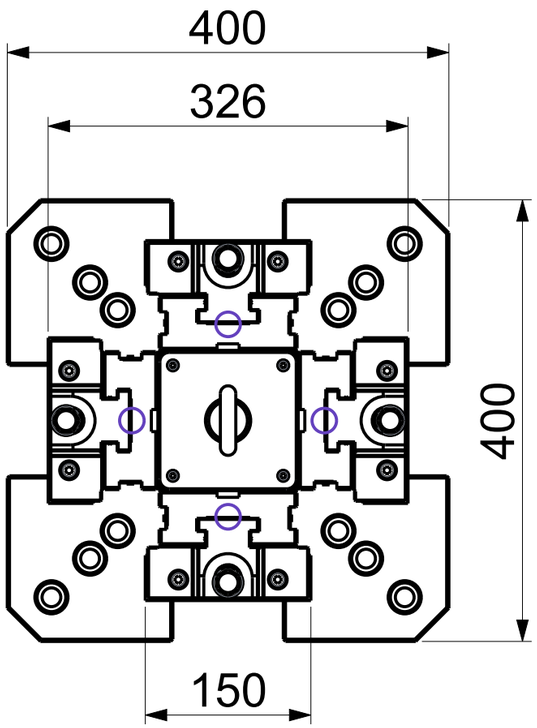

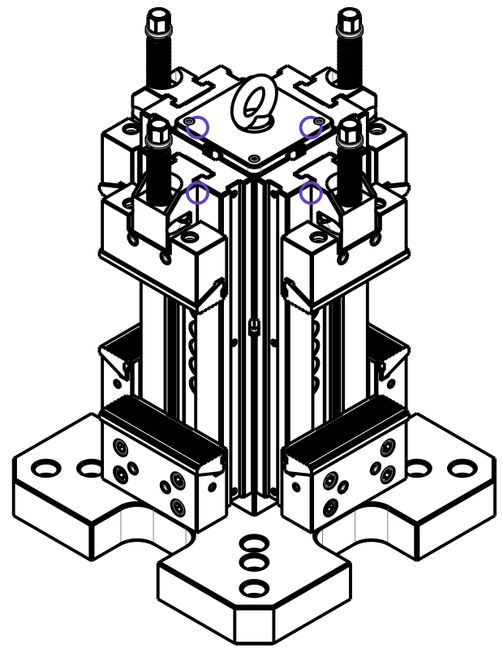

TOMBSTONE 4x90°

Art.No. FG/WH/TOMB/SQURENP004

Model. TOMBSTONE 4x90° – MV 150-200

Corp.off.D-1/18, MIDC Ambad, Nashik, Maharashtra, India - 422010.
Works: Phoenix Industrial Park, Shed No.E, Gate no.47, Mauje Wasali, Nashik.