amt

WORK HOLDING SOLUTIONS

Clamping Made Easy

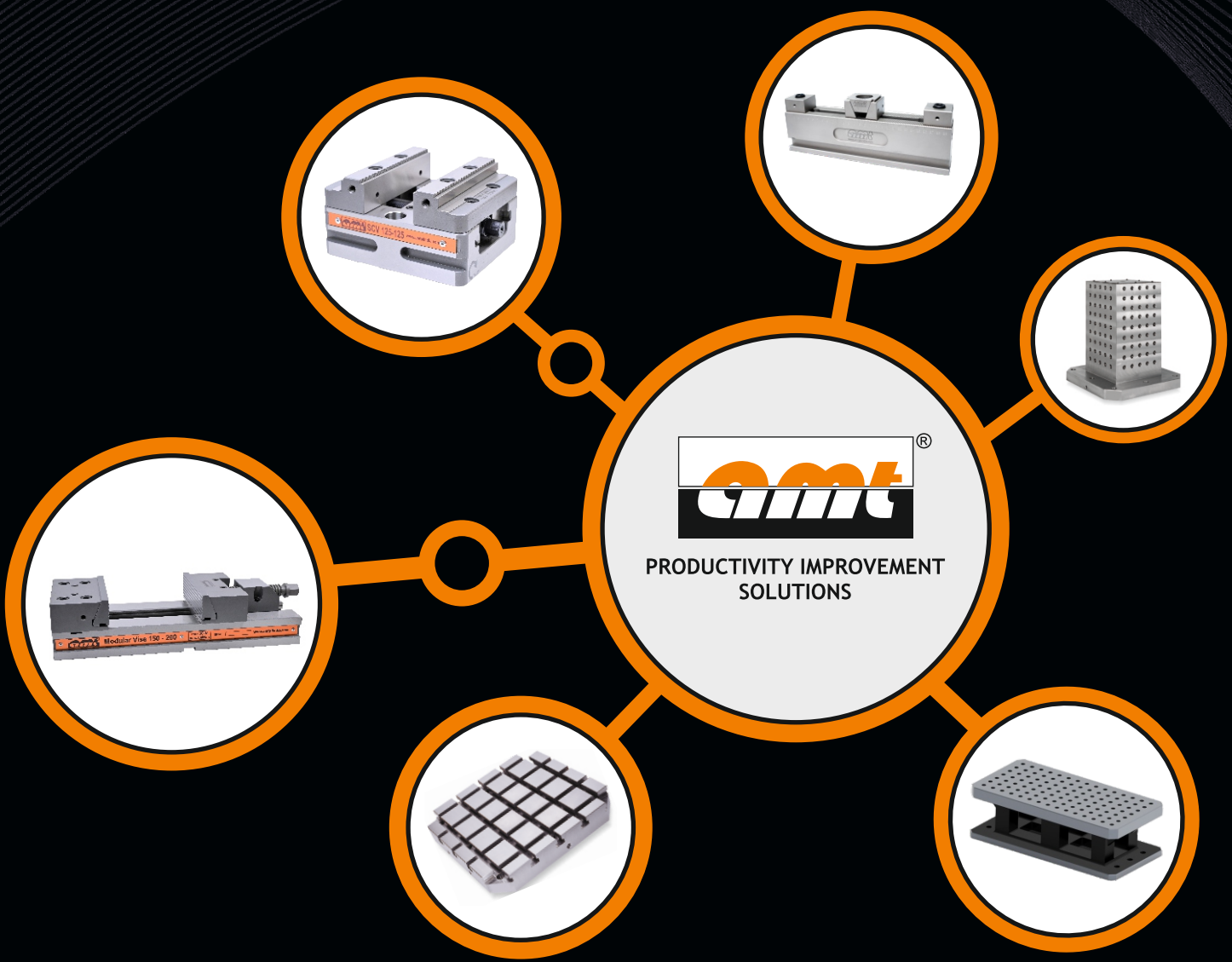

Quality Creates Trust...

INDEX

NO.	SUBJECTS	PAGE NO.
01	PRECISION MACHINE VISE 125/160	01
02	COMBINATION VISE 125/160	04
03	MODULAR VISE MV 100/150/200	07
04	SELF CENTRIC VISE- SCV 80/125/225	09
05	BACK TO BACK	12
06	TOMBSTONE 4X90°	14
07	RAIL VISE	16
08	BASE PLATE	20
09	TOMBSTONE	29
10	ANGLE PLATE	35
11	RISER TABLE	38
12	WEDGE CLAMP	41
13	SELF ALIGNING WEDGE CLAMP	44
14	CAM SCREW WITH HEXAGON WASHER	45
15	CAM SCREW WITH KNIFE EDGE WASHER	46
16	AMT LOW PROFILE LATERAL CLAMP	47
17	MANGNATIC WORK PIECE STOPPER	48
18	PIVOTING EDGE CLAMP	49

PRECISION MACHINE VISE 125/160

Scope of Application

- VMC machine - for efficient precision machining
- Horizontal installation - great variability and flexibility

Product Features

- Alloy steel body & case hardened
- Excellent ease of operation guarantees optimal handling for every application
- Fast adjustment for clamping range presetting
- Operation with the ring wrench supplied
- Reproducible clamping forces are achieved using a torque wrench
- Integrated scrapers ensure functional reliability and minimise cleaning
- Fixing on the machine table by means of mounting holes in the vise base. Additional holes can be made in the soft middle section of the vise base
- Optional centre jaw allows two or more work pieces to be clamped

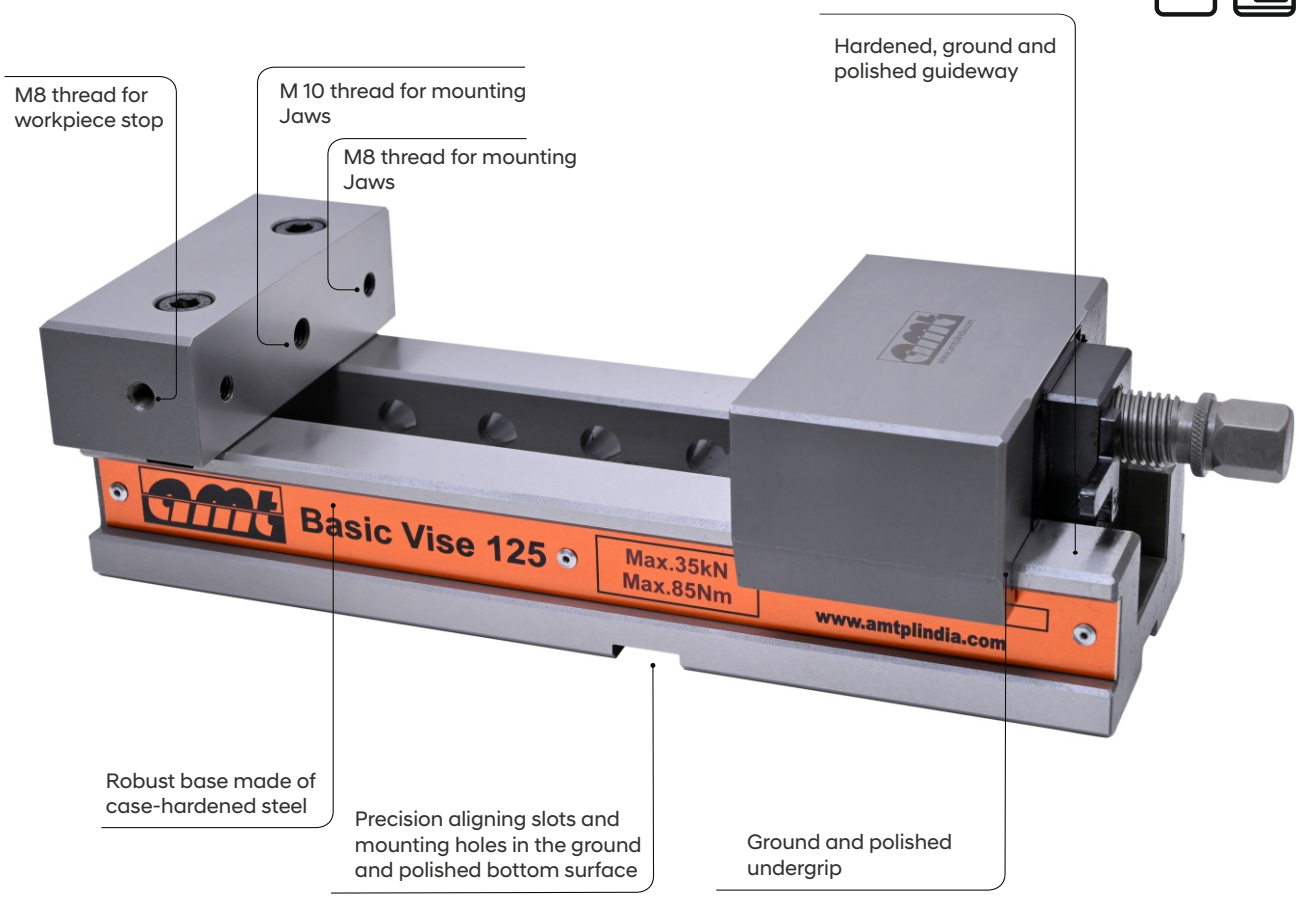

Application Image

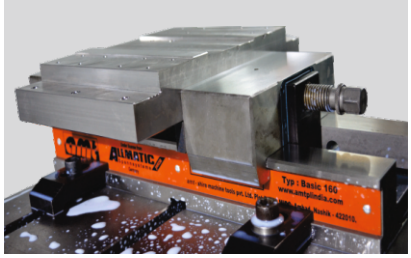

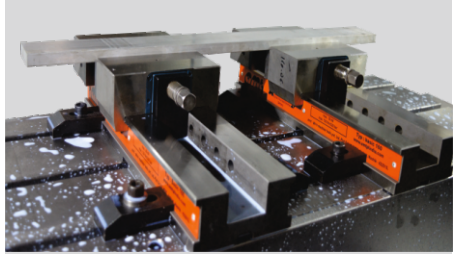



Technical Data

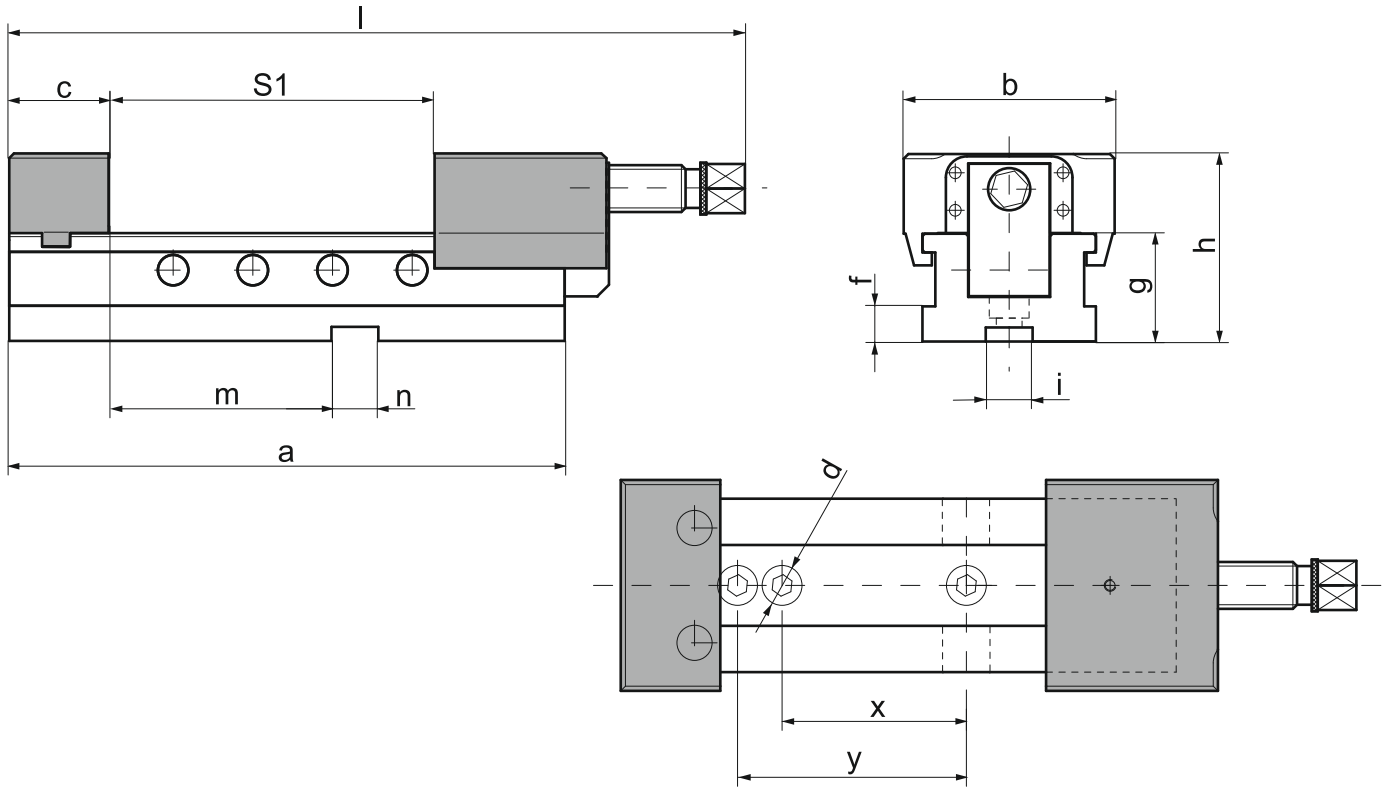

Variant		Basic 125	Basic 160
Dimensions/ Tolerances in mm	a	310	405
	b	124	160
	c	50	66
	d	13	13
	f	15	15
	g	48	56
	h	87.5	105.5
	i	20	20
	l	426	483
	m	120	128
	n	20	20
	x	100	100
	y	125	125

Variant	Basic 125	Basic 160
Clamping range S1 in mm	1-208	1-283
Torque in Nm	85	120
Max. clamping force in KN	35	50
Weight in kg	13.5	26

Scope Of Supply

- Basic Vise With Clamping Jaws - 1 No.
- Universal Jaw Assembly - 1 Set
- Work Piece Stopper - 1No.
- Click Parallel 3thk x ht 35mm -1 Set
- Side Clamp - 4 Nos.
- Combination Spanner-19mm - 1 No.
- T-type Allen Key-6mm - 1 No.
- Tenon 20x16 - 2 No.

PRECISION MACHINE VISE - ACCESSORIES

Universal Jaws (Set)



Universal combination jaws with

- Step
- Serrations
- Intigrated gripper row

* In Standard scope of supply

Intermediate Jaws

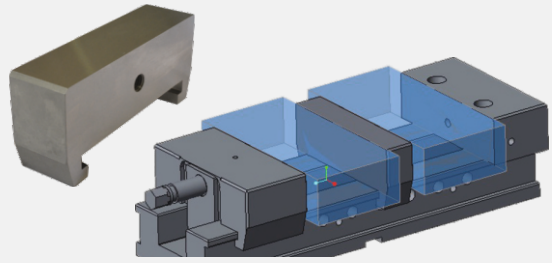

- For clamping two or more work pieces
- Installation between fixed and movable jaws of the vise

* On Request

Click Parallel (Set)

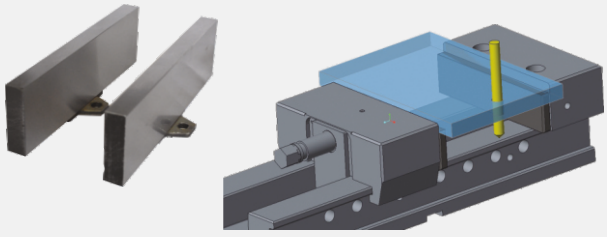

	125	160
Sizes in mm	10X25	10X25
Sizes in mm	10X35	10X44
Sizes in mm	3X35	3X44

* In Standard scope of supply

Prismatic Jaws

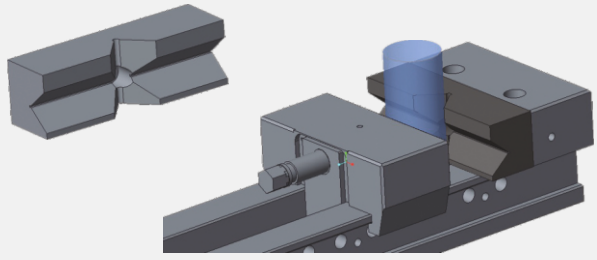

- Jaws for clamping round parts Vertically and Horizontally

125		160
Horizontal	dia 12 - 28	dia 15 - 40
Vertical	dia 18 - 55	dia 22 - 65

* On Request

Workpiece Stop

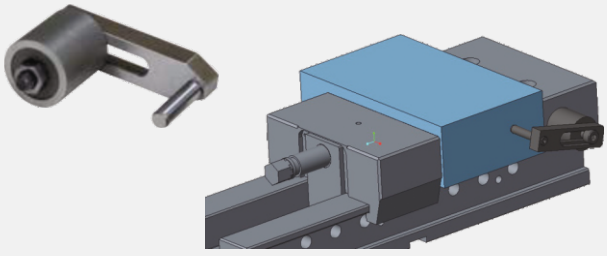

- Can be mounted on either side of the vise in the designated positions
- Position of the third workpiece axis can be preset and clamped
- Can be pre-mounted with various fixed dimensions.

* In Standard scope of supply

Soft Jaw (set)

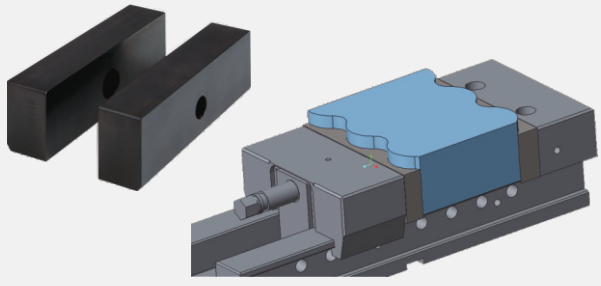

- For production of special jaws by the customer for Profile or irregular Shape workpiece
- Case-hardened steel 20MnCr5 material

* On Request

COMBINATION VISE 125/160

Scope Of Application

- Conventional and CNC controlled heavy duty milling machines

Product Feactures

- Alloy steel body and case hardened
- Excellent ease of operation guarantees optimal handling for every application
- Fast adjustment for clamping range presetting
- Operation with the ring wrench supplied
- Reproducible clamping forces are achieved using a torque wrench
- Integrated scrapers ensure functional reliability and minimise cleaning
- Allow perfect clamping even of big workplace which need the heaviest machining using machine table as surface
- Manufactured under regid quality control, hence can maintain accuracy under most severe operating conditions
- Space saving design & easy to handle

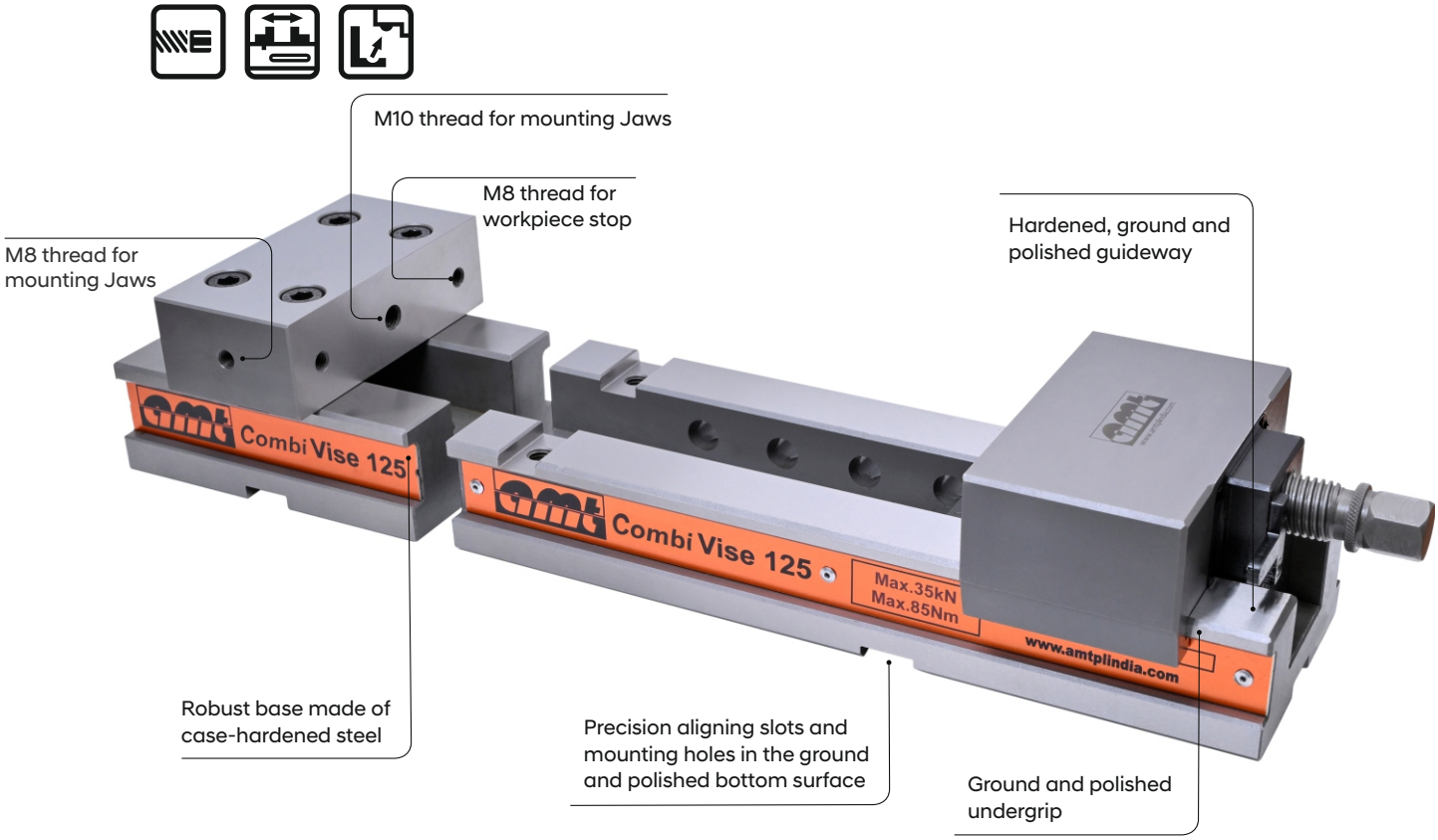

Application Image



Technical Data

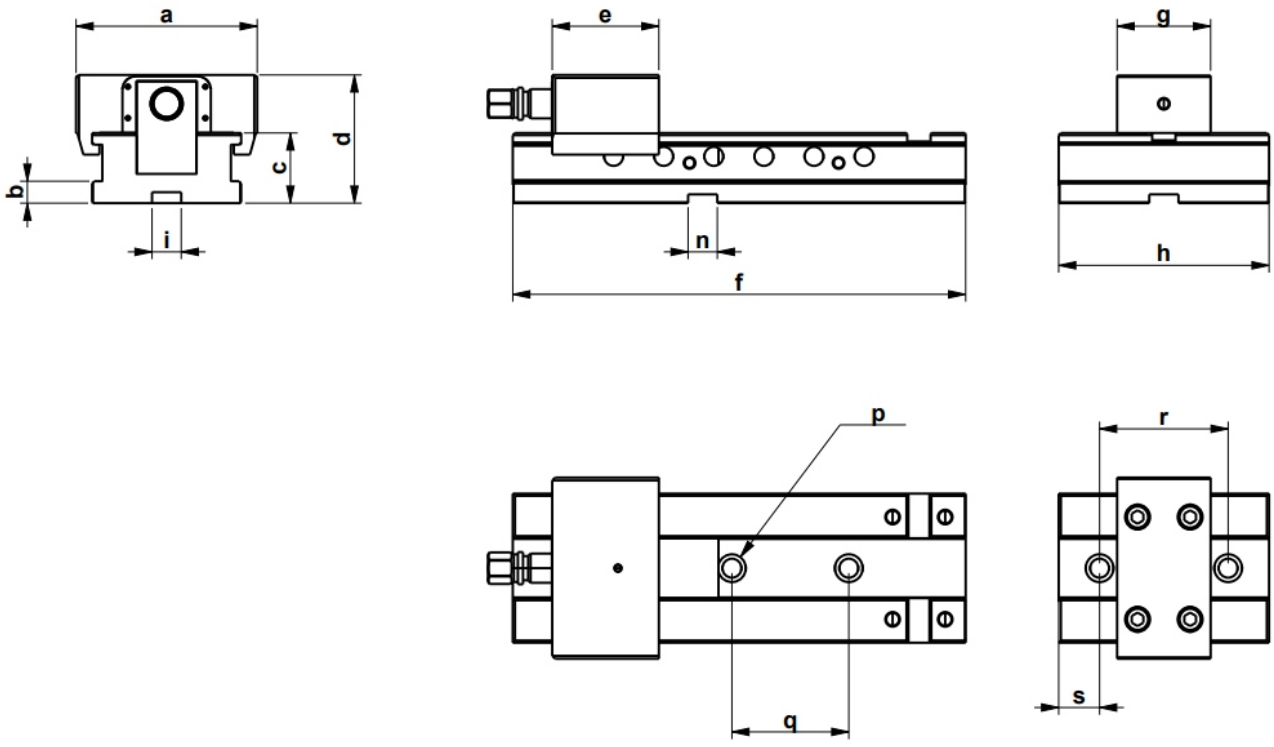

Variant		Combi 125	Combi 160
Dimensions in mm	a	125	160
	b	15	15
	c	48	56
	d	87.5	105.5
	e	35	50
	f	310	405
	g	64	84
	h	150	200
	i	20	20
	n	20	20
	p	13	13
	q	80	80
	r	88	100
	s	40	63

Variant	Combi 125	Combi 160
Torque in Nm	85	120
Max. clamping force in KN	35	50
Weight in kg (2 Module)	48	56
Minimum clamping range in mm	87.5	105.5

Scope of Supply

Description	1 Module	2 Module
Fix Jaw Unit 125/160	1 NO.	2 NO.
Extension body 125/160	1 NO.	2 NO.
Side clamp 125/160	8 NO.	16 NO.
Combination spanner-19mm	1 NO.	2 NO.
T-type allen key-6mm	1 NO.	2 NO.
Tenon 20X16 basic 125/160	4 NO.	8 NO.
Work piece stopper-basic	1 NO.	2 NO.
Universal Jaw 125/160	1 Set	2 Set

COMBINATION VISE EXAMPLES

Medium sized workpieces, Blocks & Plates clamped on vise sections

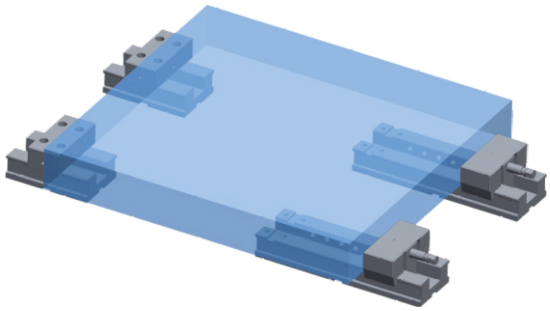

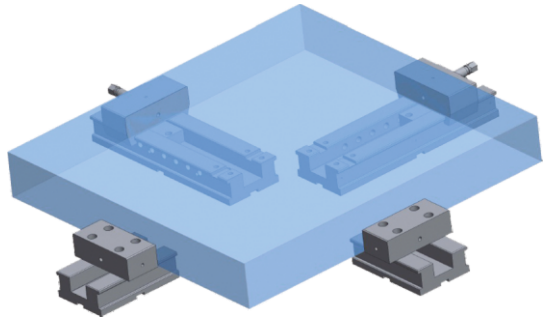

Long workpiece clamped on vise section using extension of fix jaw.

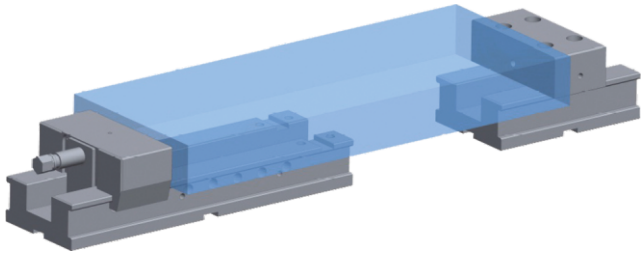

Two workpieces with different sizes clamped on vise using one fix jaw & two movable jaw extensions.

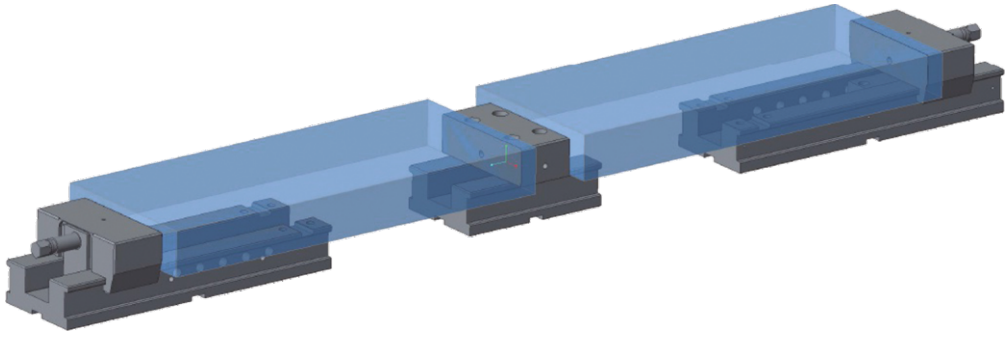

Used as regular vise for holding smaller components.

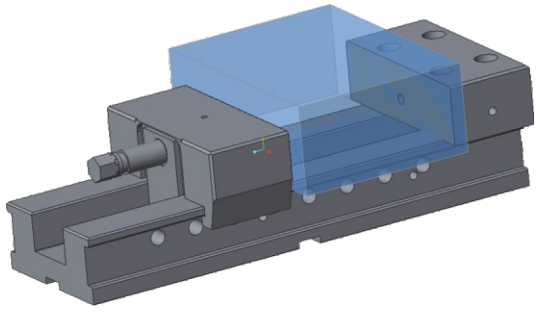

MODULAR VISE - MV 100 / 150 / 200

Scope of Application

- VMC machine - for efficient precision machining
- Horizontal installation - great variability and flexibility

Product Features

- Alloy steel body and Case-hardened at 60 HRC with Rigid construction and exclusion of Vibrations
- Parallelism of body is within 0.02 mm. vise with pull-down jaws.
- Since the workpiece is clamped by pulling down, floating up is prevented in spite of the **Powerful clamping force**
- Reproducible clamping forces are achieved using a torque wrench
- 4 extra tapped holes over the jaws for special stack type jaw application

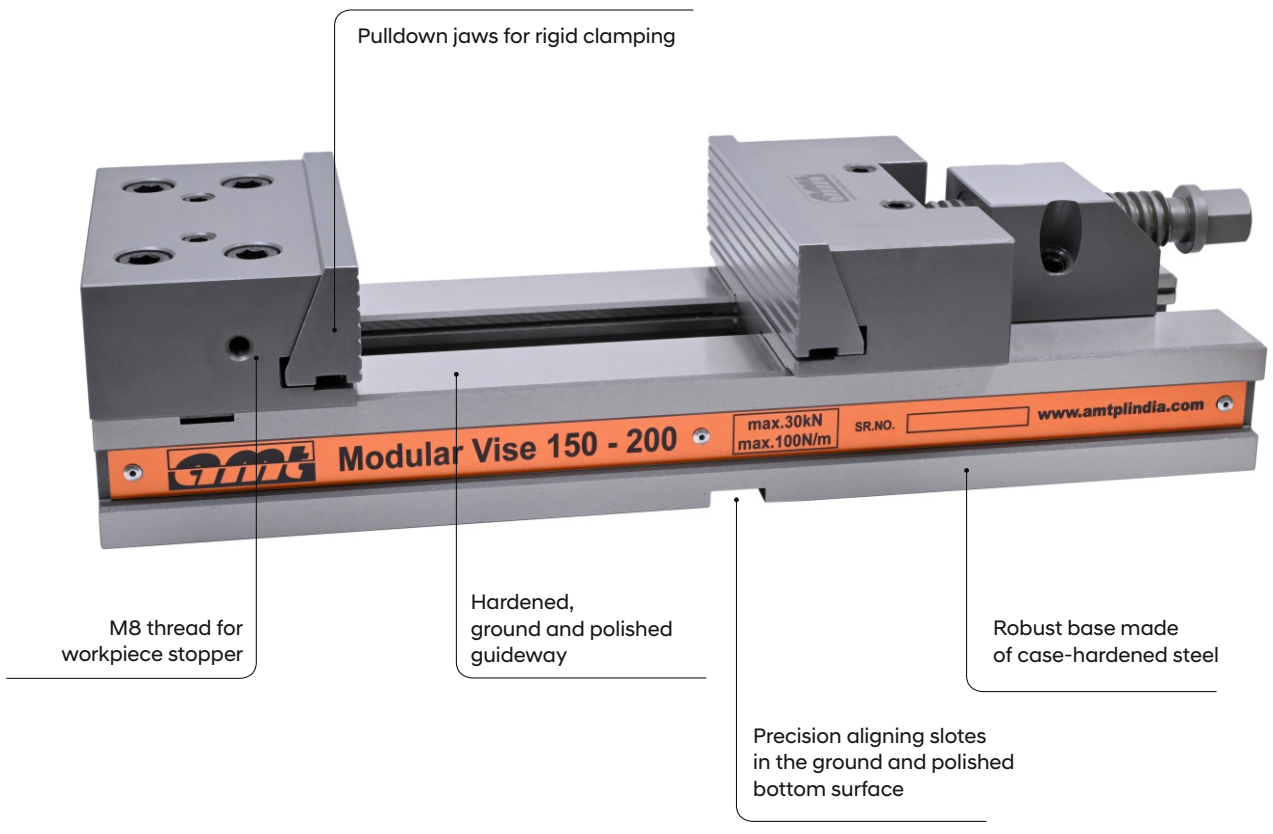

Application Image

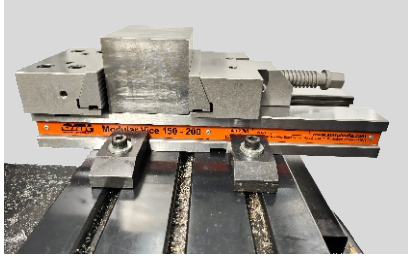
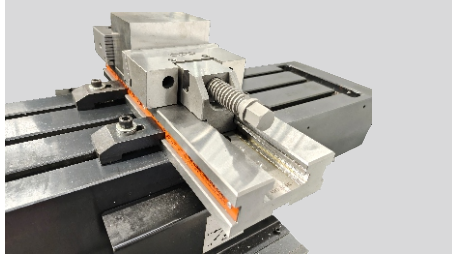


Technical Data

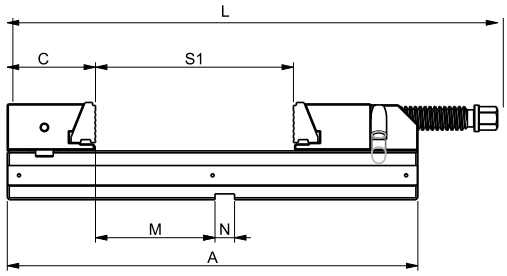

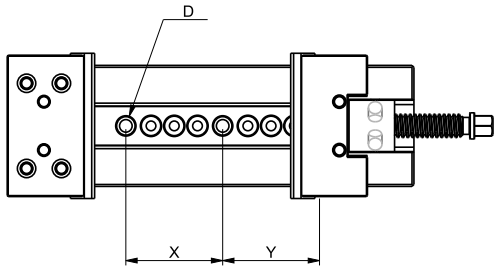

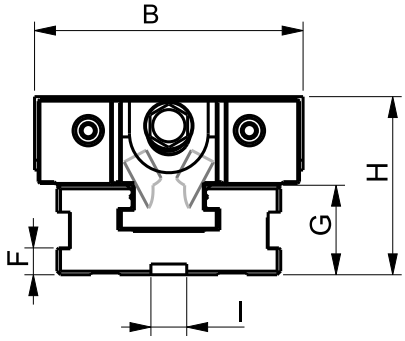

ACCESSORIES

Prismatic Jaw

Jaws for clamping round parts,
Horizontal diameter : 12-28 mm,
Vertical diameter : 18-55 mm

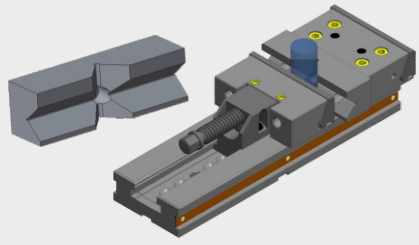

Note : Prismatic Jaw only applicable for MV150-200, MV150-300

Variant		MV 100-100	MV 150-200	MV 150-300	MV 200-400
Dimensions in mm	A	270	420	520	695
	B	100	150	150	200
	C	67	90	90	114
	D	N/A	21	21	26
	F	11	15	15	21
	G	35	50	50	70
	H	65	100	100	133
	I	20	20	20	20
	L	306	500	600	775
	M	63	122	122	121
	N	20	20	20	20
	X	N/A	100	100	100
	Y	N/A	100	100	100
	S1	105	200	300	400

Scope Of Supply

- Vise with Clamping Jaws- 1 No.
- Work Piece Stopper- 1 No.
- Side Clamp- 4 No.
- Combination Spanner/ L-Spanner (MV 200/300) - 1 No.
- T-type Allen Key -1 No.
- Tenon 20x16-2 No.

Variant	MV 100-100	MV 150-200	MV 150-300	MV 200-400
Dimensions (mm)	306 x100 x 65	500X150X100	600X150X100	775 X 200 X 133
Clamping Range (mm)	105	200	300	400
Maximum Clamping force (kN)	20	30	30	40
Maximum Torque (Nm)	30	100	100	-
Weight (Kg)	6.5	34	38	70

N/A : Not Applicable

SELF CENTRIC VISE – SCV 80 / 125 / 225

Scope of Application

- Ideal for use on 3, 4 & 5 Axis Machining centers due to its compact design
- Horizontal Installation-Suitable for Vertical Machining Centers
- Vertical Installation - Suitable for Horizontal Machining Centers

Product Features

- Heavy duty high precise self-centric clamping vise with good repeatability
- Compact design with best accessibility
- Interface for ZPS clamping and mounting holes as standard
- Spindle screw Blackodising (for high hardness, wear, corrosion resistance and excellent lubricity)
- 4 Bolt jaw mounting for Increased Clamping Force
- Provision of M5 holes for mounting additional Jaws
- Serrated gripper teeth for superior bite with 45° Dovetail provision
- Featuring a dowel pin for better accuracy in Jaws
- High material savings due to minimal clamping edge requirements
- 3mm gripp clamping is possible

Gripp Clamping

- With the clamping jaw systems you can clamp parallel workpieces safely and quickly.
- Stamping and clamping takes place in one work step.

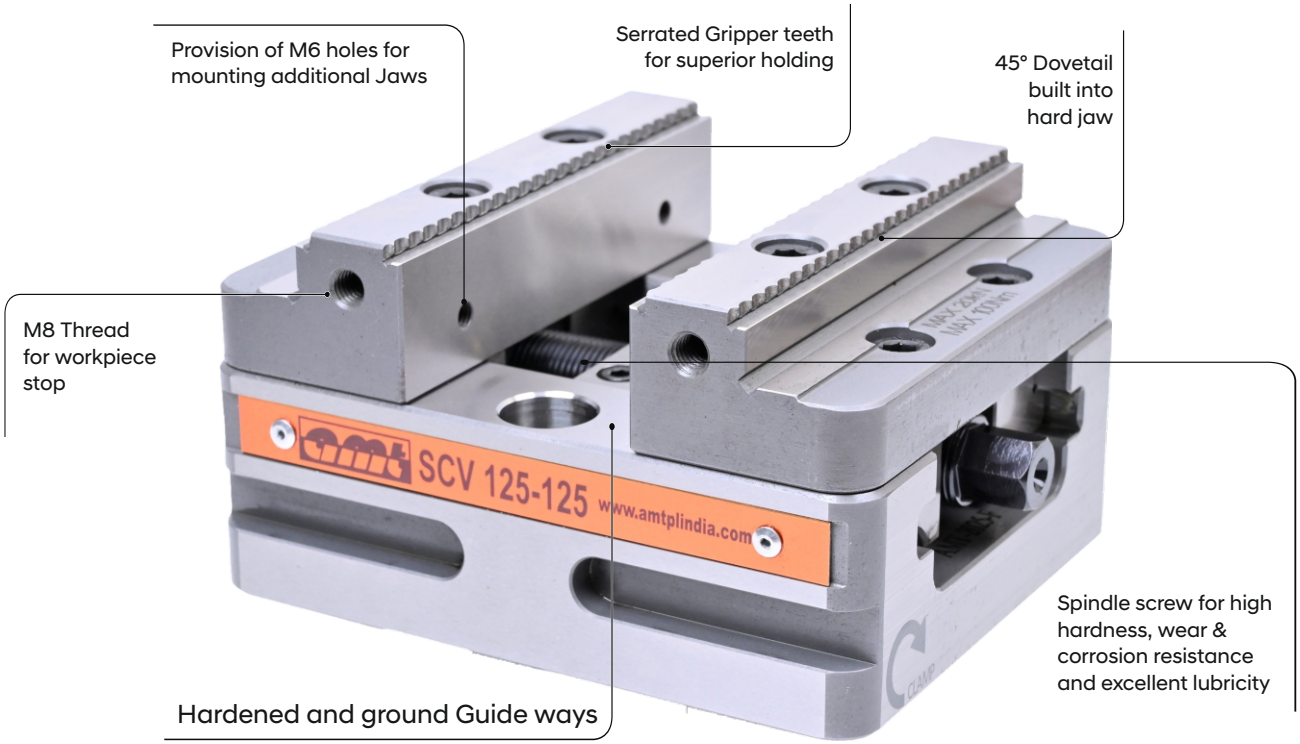

Technical Data

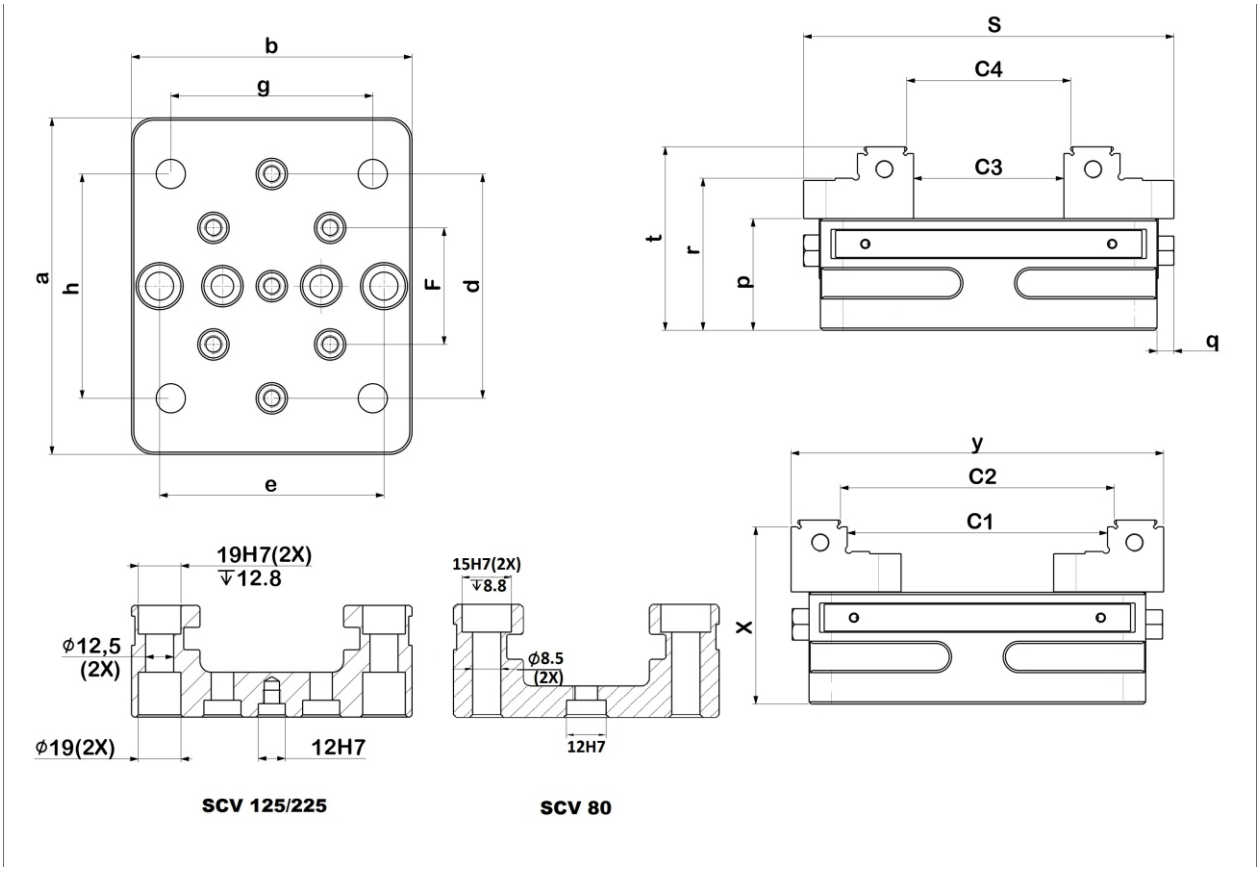

Variant		SCV 80	SCV 125	SCV 225
Dimensions in mm	a	105	150	250
	b	80	125	125
	e	60	100	96
	f	52±0.01	52±0.01	96±0.02
	g	N/A	N/A	100
	h	N/A	N/A	200
	p	35.8	50	50
	q	7.5	7.5	7.5
	r	49	68	68
	s	116	167	267
	t	57	82	82
	x	54	79	79
	y	123	166	266
	C1	74	120	220
	C2	80	125	225
	C3	36	68	168
	C4	42	73	173

Variant	SCV 80-80	SCV 125-125	SCV 125-225
Dimensions (mm)	105 x 80 x 57	150 X 125 X 82	250 X 125 X 82
Clamping Range (Forword Jaws) (mm)	6 – 40.3	6-73	6-173
Clamping Range (Reversed Jaws) (mm)	38.5 – 76.3	55-125	55-225
Maximum Clamping Fource (kN)	22	20	20
Maximum Torque Force (Nm)	60	100	100
Weight (Kg)	2.5	8	11

Scope Of Supply

- Self Centric Vise with Clamping Jaws - 1 No
- Work Piece Stopper -1 No.
- Side Clamp - 4 Nos
- Rachet With Socket - 1 No

SELF CENTRIC VISE - ACCESSORIES

Soft Jaws

- For holding parts that would be difficult to fixture with standard, flat vise jaws during machining.
- Suitable for Profile and Irregular shape workpiece.



* On Request

Intermediate Jaw

- For clamping two work pieces simultaneously
- Installation between both the jaws

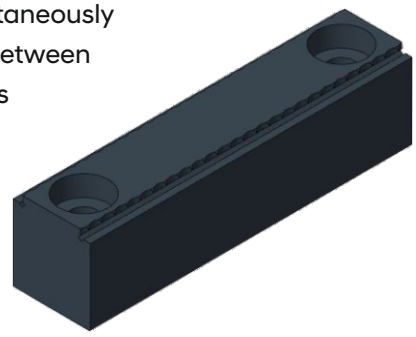

* On Request

Riser Block/Console

- For raising the Self Centric SCV 125/225 Improved access for five-sided machining



* On Request

Zero Point System

- For Quick clamping and alignment of Vise Allows you to clamp parts with accuracy, speed, ease and flexibility using retractable nipples and fast-closing clamps



* On Request

Adaptor Plate

- Adaptor plate for 4th and 5th axis Rotating axis – Diameter 160 mm and 200 mm



* On Request

Pyramid

- The pyramid work holding bundles facilitate clamping of three individual components in one fixture and completed in a single setup.

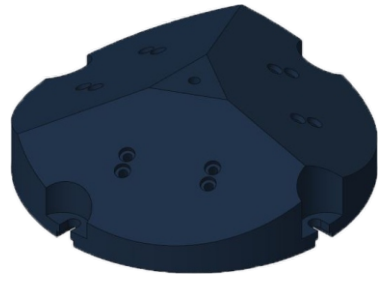

* On Request

Back to Back clamping column MV150-200

Scope of Application

• Modular clamping system for horizontal machining centre.

Product Features:

• Alloy steel body and case hardened.
• Clamping force increments can be pre-set.at most, two revolutions are required to reach the max. clamping force.
• Parallelism of body is within 0.02 vice with pull-down jaws.
• Since the work piece is clamped by pulling down, floating up is prevented in spit e of the powerful clamping force.
• Individual adaption to your machine (pallet, travers and work piece) is possible
• Two clamping point permit 3-sided machining.

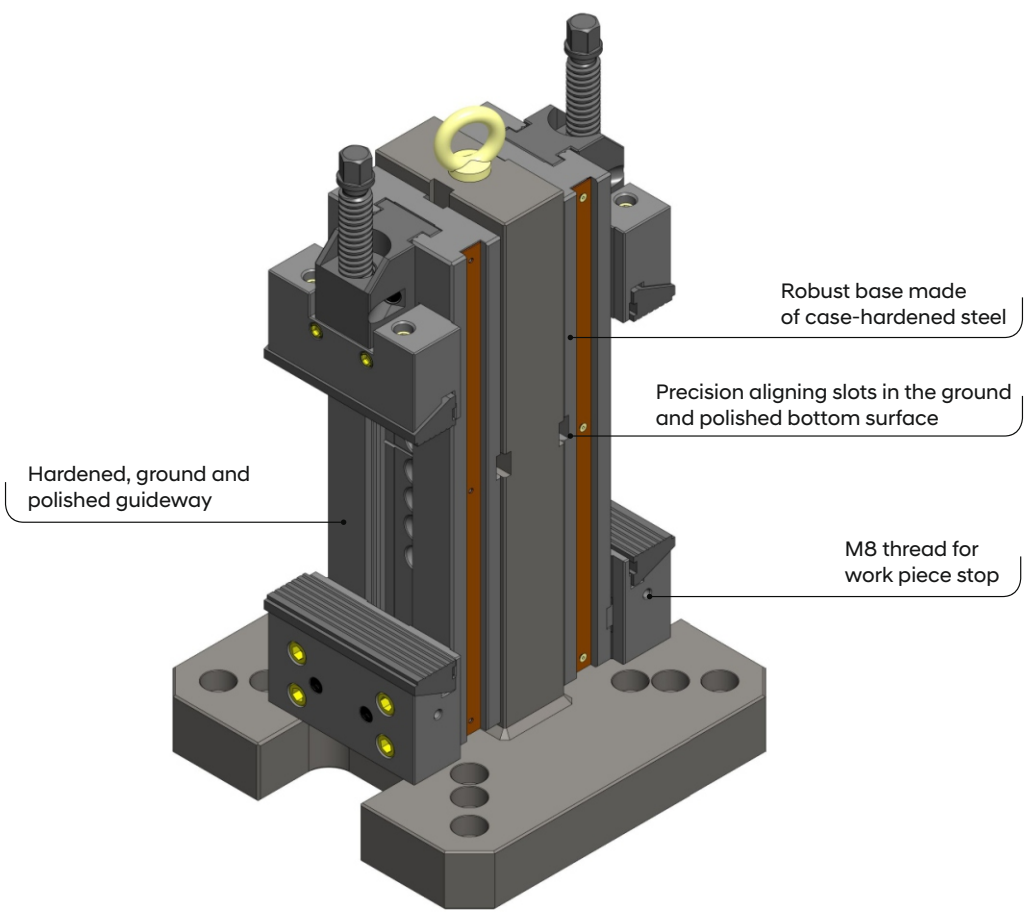

Technical Data

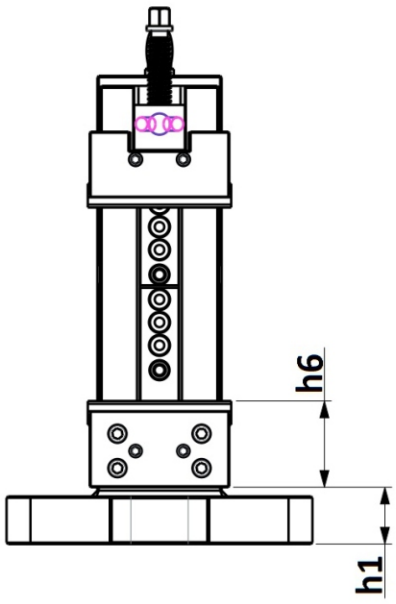

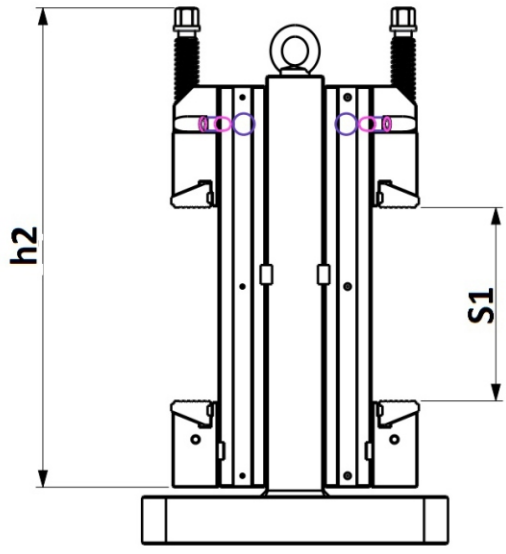

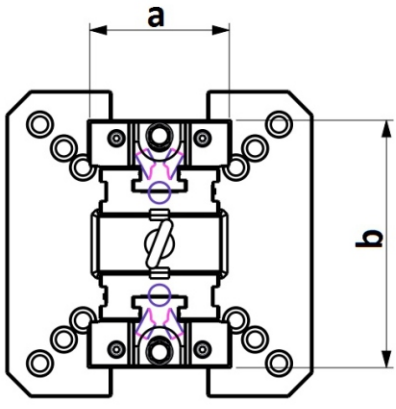

Variant		MV 150-200
Dimensions in mm	a	146
	b	260
	h1	59.5
	h2	501
	h6	90

Variant	MV 150-200
Clamping range S1 in mm	200
Max.torque in Nm	100
Max.clamping force in kN	30
Weight in kg	122

TOMBSTONE 4X90° MV150-200

Scope of Application

• Modular clamping system for horizontal machining centre.

Product Features:

• Alloy steel body and case hardened.
• Base gives high stability and extreme accuracy for your machining
• Parallelism of body is within 0.02 vice with pull-down jaws.
• Since the work piece is clamped by pulling down, floating up is prevented in spit e of the powerful clamping force.
• Individual adaptation to your machine (pallet, traverses and work pieces) is possible.
• Four clamping points permit three-sided machining

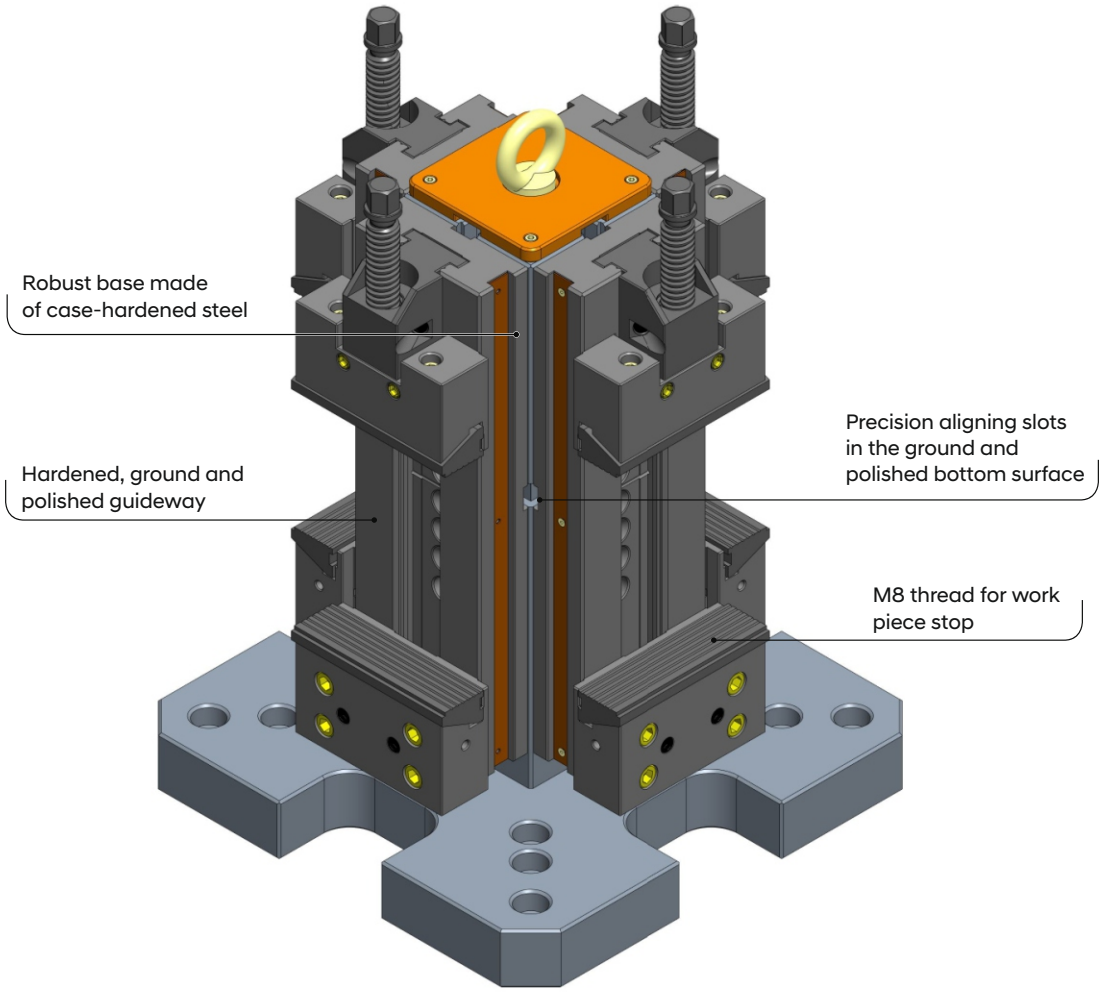

Technical Data

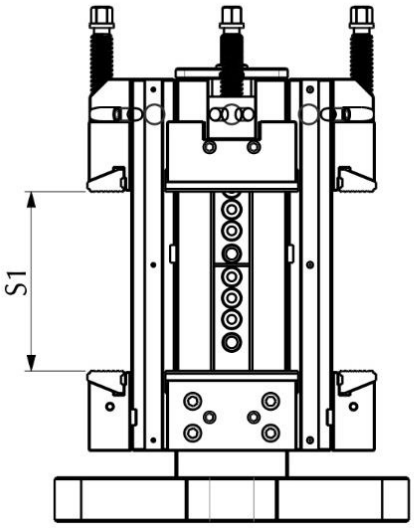

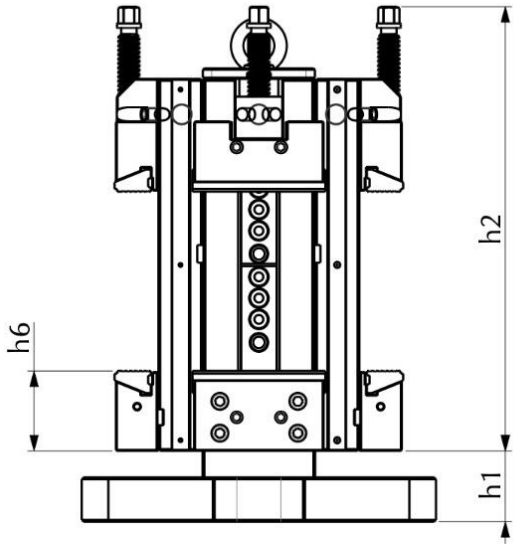

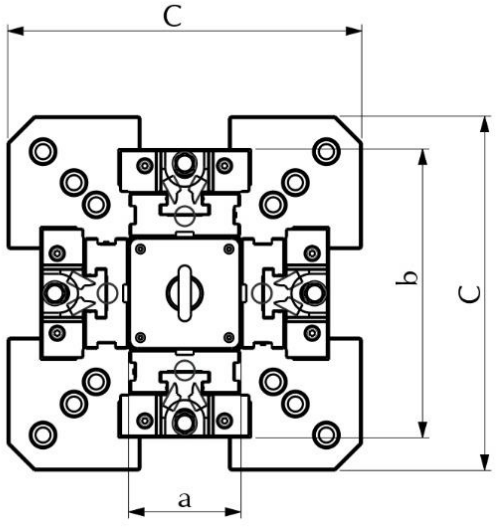

Variant		MV 150-200
Dimensions in mm	a	127
	b	326
	c	400
	h1	80
	h2	501
	h6	90

Variant	MV 150-200
Clamping range S1 in mm	200
Max.torque in Nm	100
Max.clamping force in kN	30
Weight in kg	227

RAIL VISE

Application

AMT Rail vise features a range of components that are suitable for clamping different work piece types, sizes and materials on all types of work holding platforms and machining centers.

Product Features

- AMT Rail vise are highly flexible, and they quickly and easily clamp multiple small or large work pieces.
- Can be used on VMC/4th axis/HMC machine-for efficient precision machining
- Horizontal installation - great variability and flexibility
- Modularly constructed clamping system, which has its advantages in the versatile application possibilities.
- Through use of a wide array of fixed jaws and wedge clamps, this clamping system is adapted to your needs.
- Riser blocks/parallels. These are used to lift up the workpiece from base.
- Reproducible clamping forces are achieved using a torque wrench.
- Reproducible clamping range is achieved using scale.

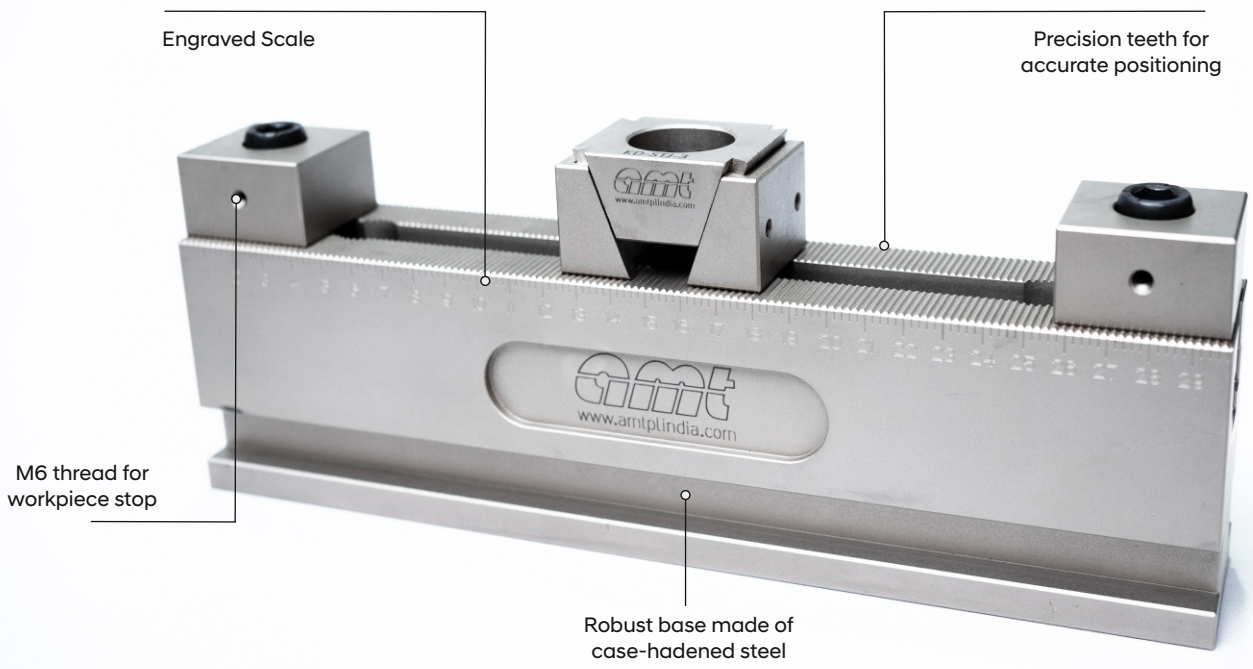

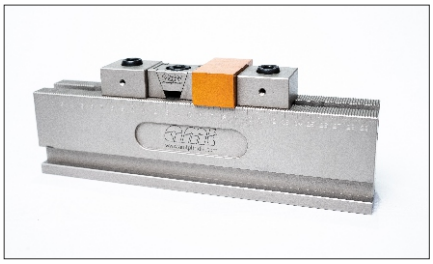

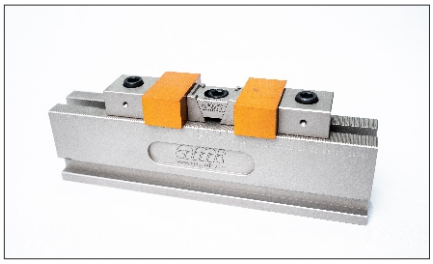



RAIL VISE BODY

Application

- Optionally designed for one or more workpieces.
- For rapid clamping of work pieces for machine processing. Through use of a wide array of fixed stops and wedge clamps, this clamping system is adapted to your needs.

Product Features

- Alloy steel body & case hardened 58 to 62 HRC.
- Excellent ease of operation guarantees optimal handling for every application
- Fast adjustment for clamping range pre-setting through precision scale marking.
- Accurate positioning and alignment because of the rack teeth provided on both the body and the fix jaws.
- Rack teeth pitch accuracies (+/-0.02 mm).
- Operation with the Allen key.



FIXED CLAMPING JAW

WITH STANDARD & SERRATED SURFACE

Application

- The fixed stop is positioned on the clamping rail via the tightening bolt and grips, positively interlocked, on the 2 mm serration.
- Workpieces can be positioned and clamped with great clamping force.

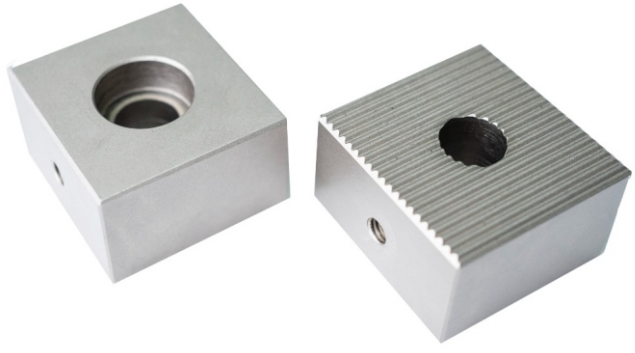

Product Features

- Alloy steel body & case hardened 58 to 62 HRC.
- Excellent ease of operation guarantees optimal handling for every application.
- Provision to fix workpiece stop.

Technical Data

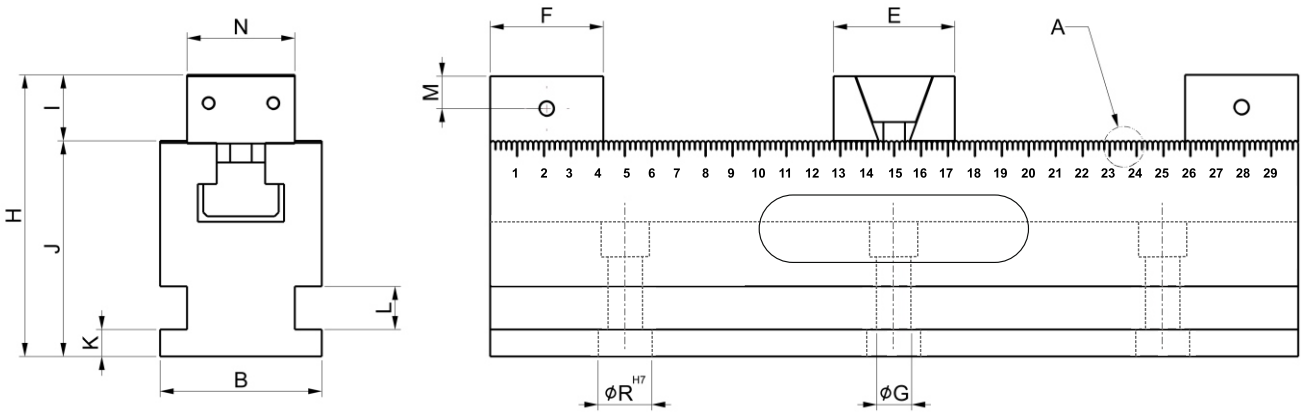

Scope Of Supply

- Rail Body 300/500 - 1 Nos.
- Fix Jaw – STJ - 2/3 Nos.
- Wedge Clamp With Standard Jaw KD-STJ-2/KD-STJ-3 - 1/2 Nos.
- Side Clamp-RL - 4/6 Nos
- Workpiece Stopper Plate-RL - 2/3 Nos.

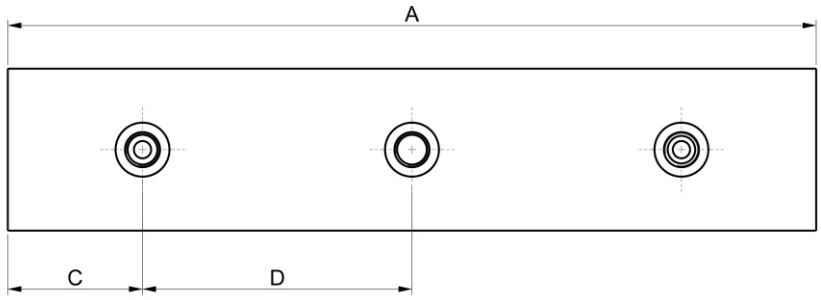

MODEL	A	B+/-0.05	C	D+/-0.01	E	F	G	H	I	J	K	L	M	N	R
KD-STJ-2 RL-300	300	60	50	100	42	42	13	105.5	25.5	80	15	16	12	40	20
KD-SJ-2 RL-300	300	60	50	100	42	42	13	105.5	25.5	80	15	16	12	40	20
KD-STJ-3 RL-500	500	60	50	200	60	42	13	110.5	30.5	80	15	16	12	40	20
KD-SJ-3 RL-500	500	60	50	200	60	42	13	110.5	30.5	80	15	16	12	40	20

AMT RAIL VICE ACCESSORIES

STEP JAW



Suitable for through machining.
Maximum tool access to the work piece.

WORK PIECE STOPPER



Lateral stop for positioning work pieces.
Stop is screwed to the fixed jaw and can be moved.

POSITIONING BUSH



For Precision positioning & quick aligning
Hardened & ground

SIDE CLAMP



For mounting of the clamping rail on the machine table with slots.

APPLICATION IMAGES

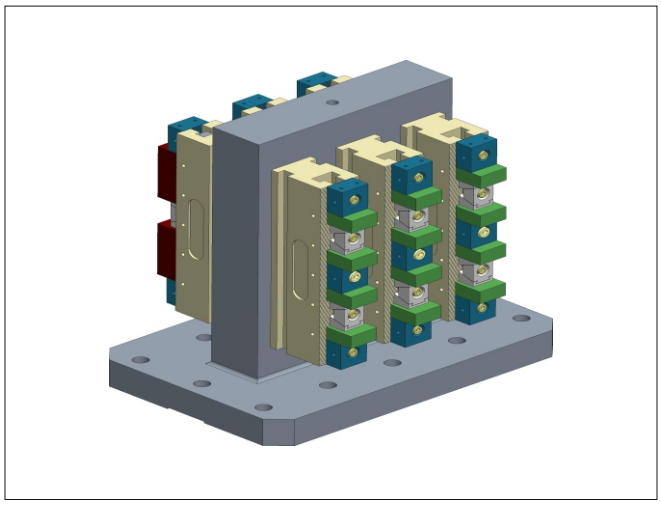

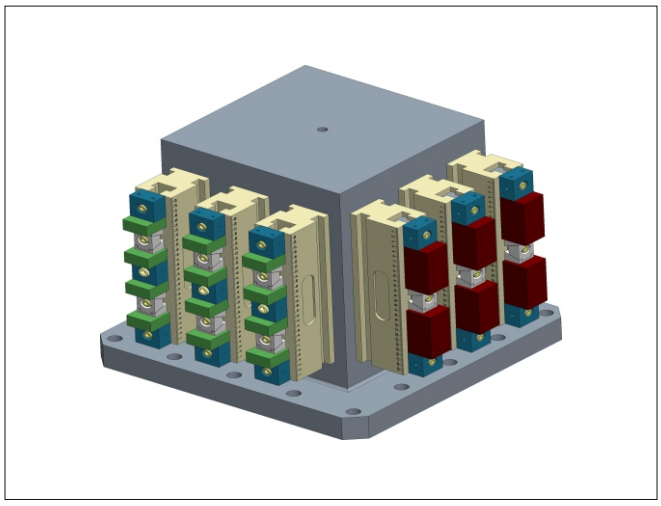

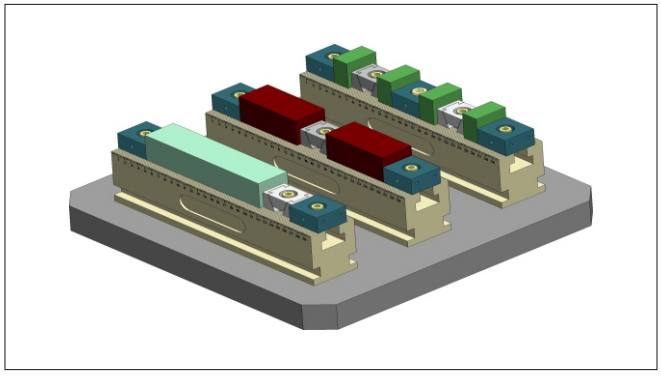

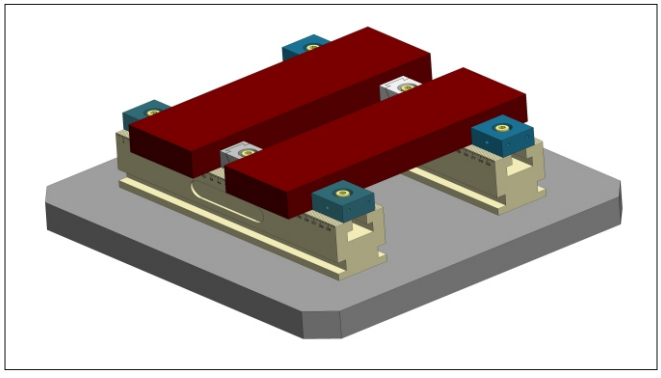

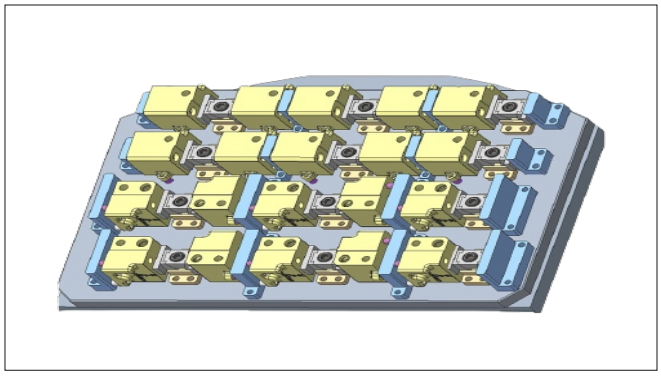

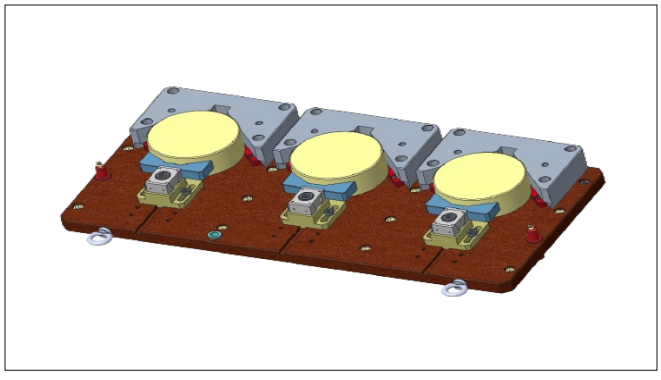

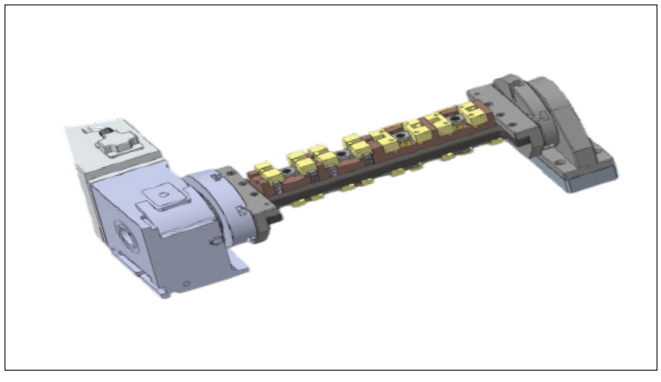

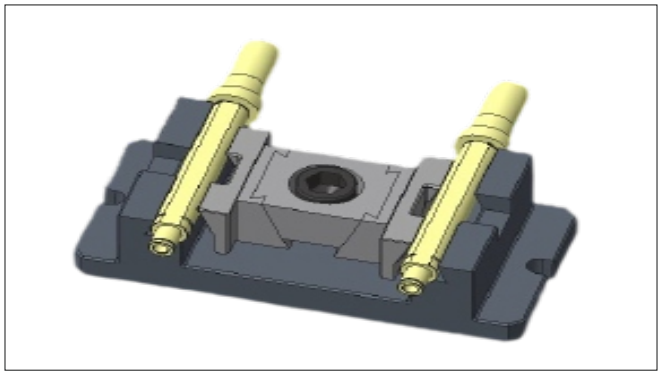

BPP/RT



Rectangular Base Plate - Plane

- Material: Cast iron GG30(DIN) / C45
- Heat Treated (Normalised)
- Features : • Can be special ordered with any size
  • Thickness available from 35mm to 50mm
- Application: vertical machining center

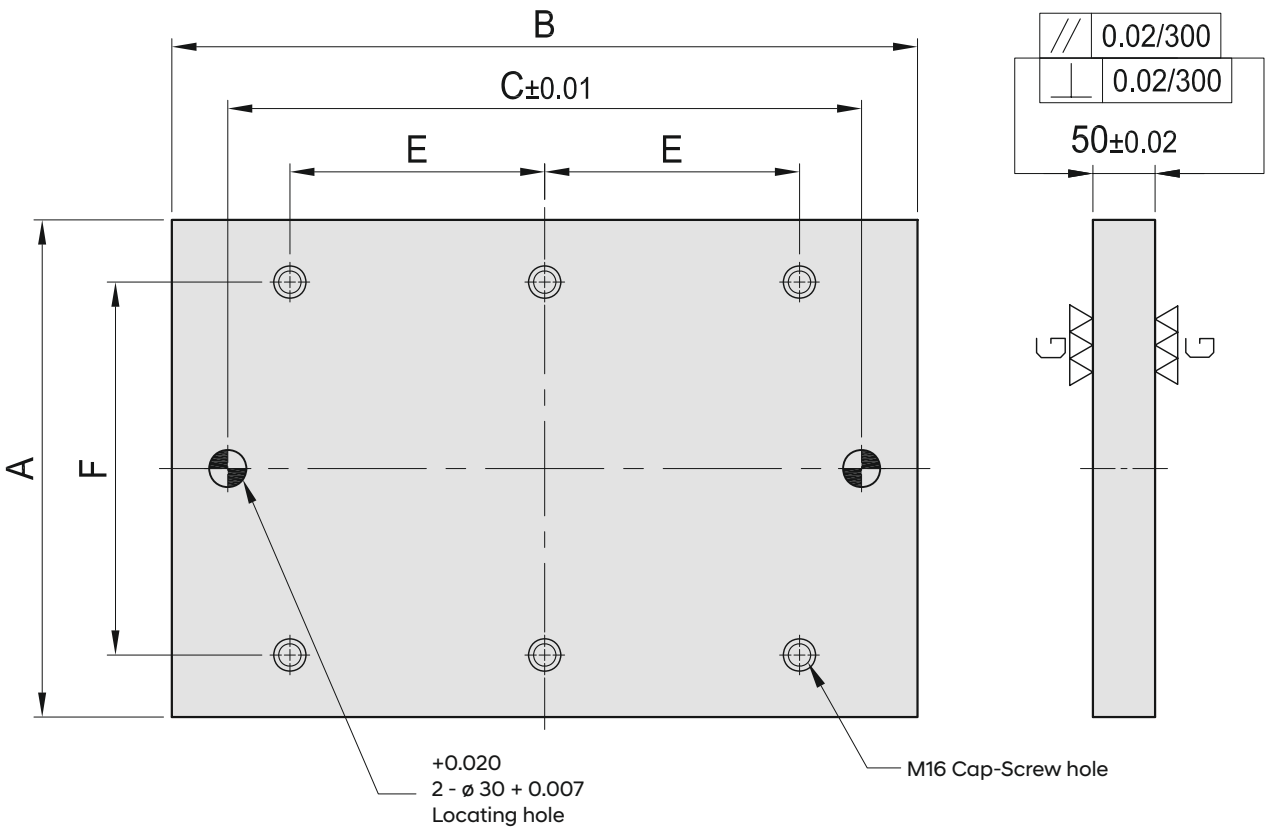

MODEL	A	B	C	D	E	kg
BPP/RT/400600	400	600	–	–	–	88
BPP/RT/500600	500					106
BPP/RT/400800	400	800	–	–	–	113
BPP/RT/450900	450	900				142
BPP/RT/5001000	500	1000	–	–	–	176

Note : C.E.F. Values as per customer's requirement

Rectangular Base Plate - Grid Hole



- Material : Cast iron GG30(DIN) / C45
- Heat Treated (Normalised)
- Features : • Alignment bushing
  - Threaded insert
  - MTP hole spacing: 50+0.02
  - Grid holes available in M12 & M16
  - Easily adapts to standardized jig components
- Application : Vertical machining center

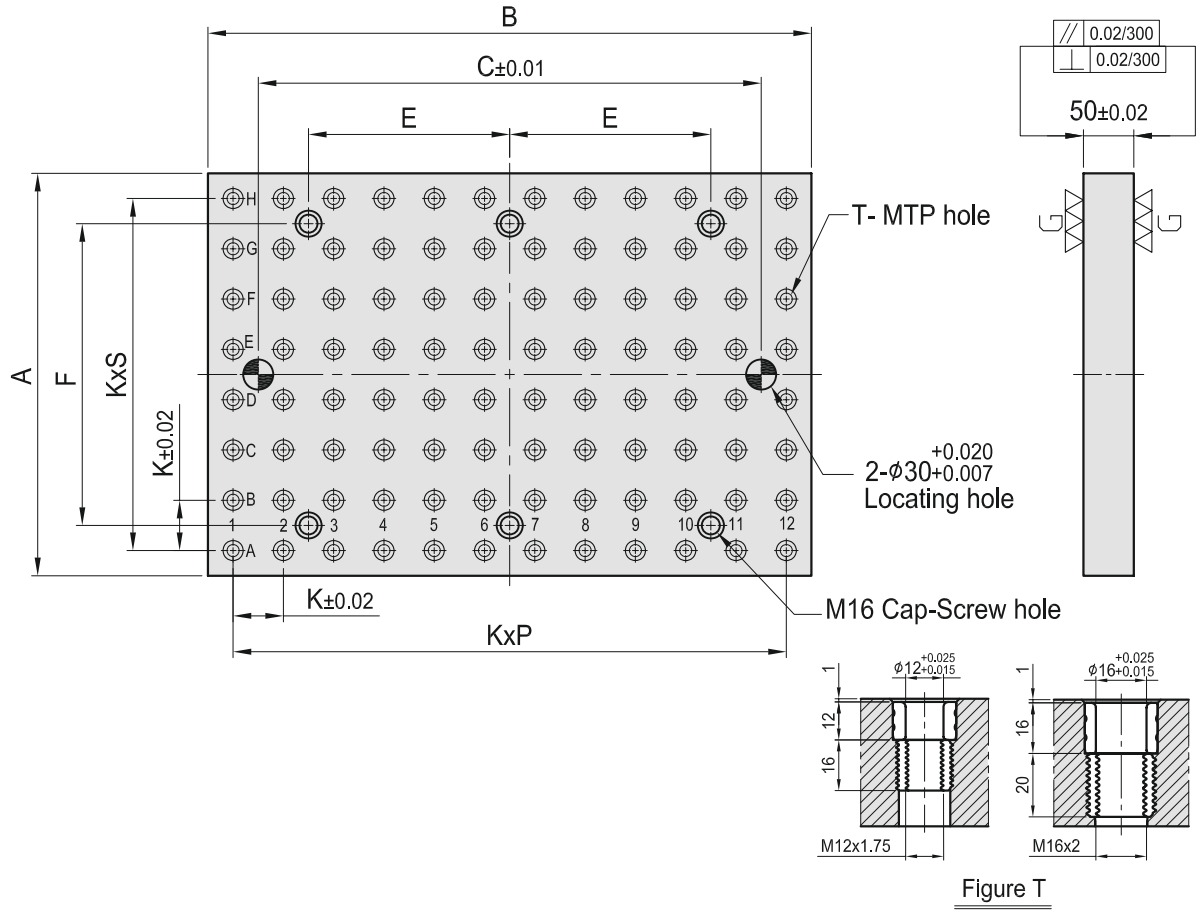

Figure T

MODEL	A	B	C	D	E	F	G	H	MTP	kg
BPG/RT/400600	400	600	–	–	–	50	11	7	96	88
BPG/RT/500600	500							9	120	106
BPG/RT/400800	400	800	–	–	–	50	15	7	128	113
BPG/RT/450900	450	900					17	8	158	142
BPG/RT/5001000	500	1000	–	–	–	50	19	9	200	176

Note : C.E.F. Values as per customer's requirement

BPT/RT

Rectangular Base Plate - T- slot



- Material : Cast iron GG30(DIN) / C45
- Heat Treated (Normalised)
- Features : • T-slots available in 14mm & 18mm (D)
  - T-slots running in 2 directions
  - Easily adapts to standardized jig components
- Application: : Vertical machining center

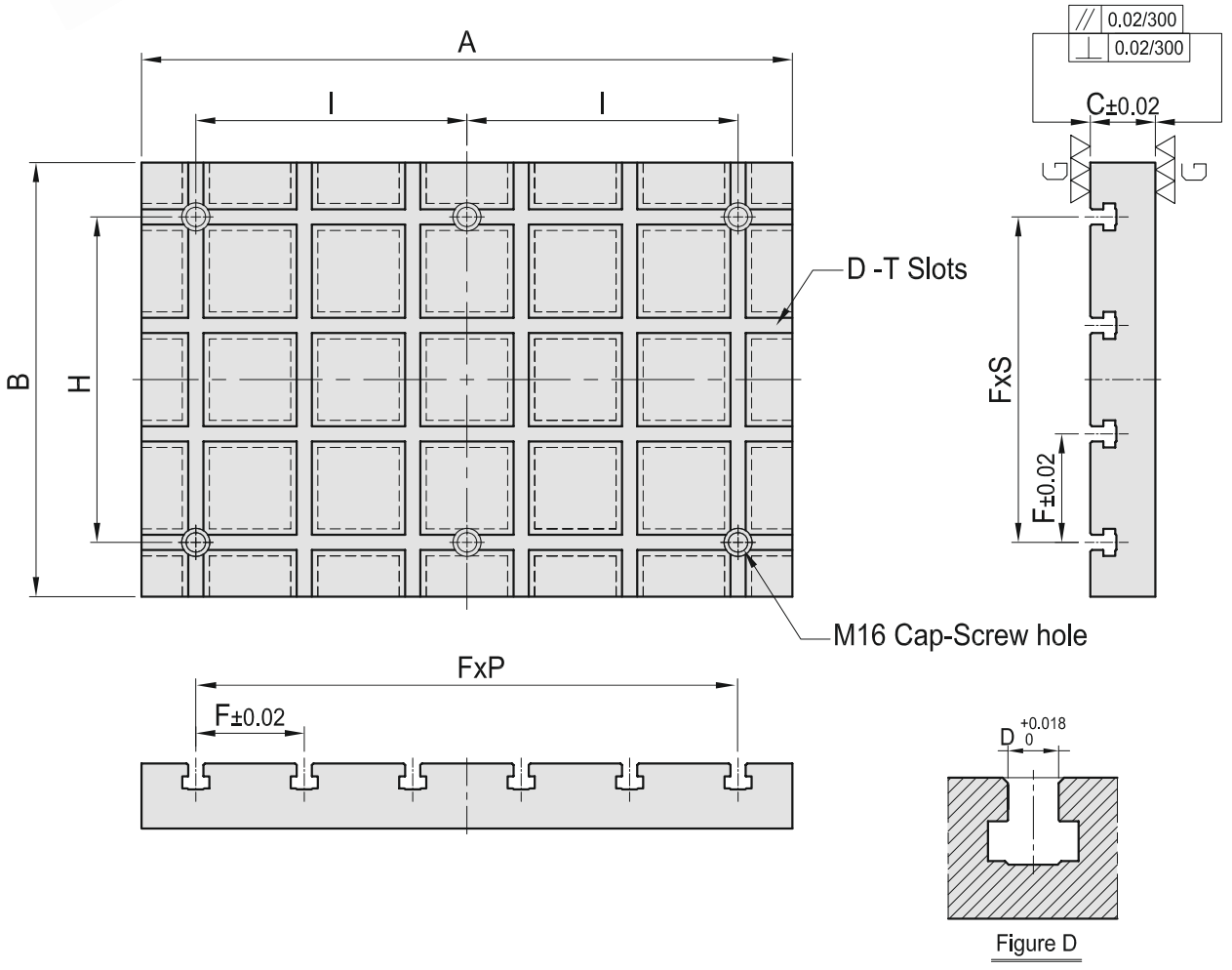

Figure D

MODEL	A	B	C	D	E	F	G	H	kg
BPT/RT/400600	600	400	60	100	5	3	–	–	92
BPT/RT/500600		500				4			115
BPT/RT/400800	800	400	60	100	7	3	–	–	117
BPT/RT/450900	900	450			8				168
BPT/RT/5001000	1000	500	60	100	9	4	–	–	198

Note : H and I Value as per Customer Requirment

BPP/SQ

Square Base Plate - Plane



- Material : Cast iron GG30(DIN) / C45
- Heat Treated (Normalised)
- Features : • Can be special ordered with any size
  - MTP hole
  - Thickness available from 35mm to 50mm
- Application : Horizontal machining center

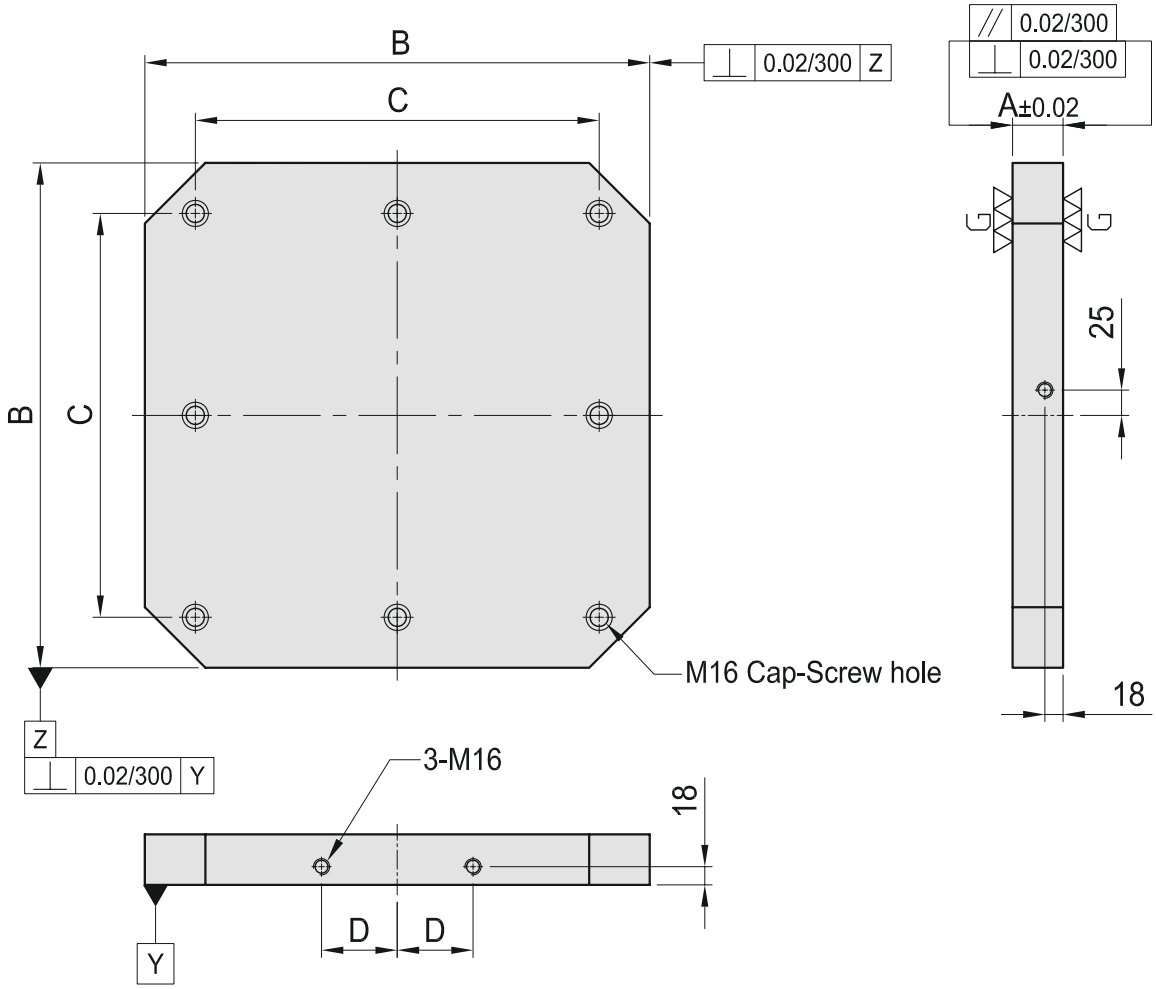

MODEL	A	B	C	D	MOUNTING HOLES	kg
BPP/SQ/400	50	400	320	55	4	57
BPP/SQ/500	50	500	400	75	8	88
BPP/SQ/630	50	630	500	100	8	140
BPP/SQ/800	50	800	640	135	8	225

Note : C Value as per Customer Requirment

BPT/SQ

Square Base Plate - T-slot



- Materia l : Cast iron GG30(DIN) / C45
- Heat Treated (Normalised)
- Features : • T-slots available in 14 & 18 (D)
  - T-slots running in 2 directions
  - Easily adapts to standardized jig components
- Application : Horizontal machining center

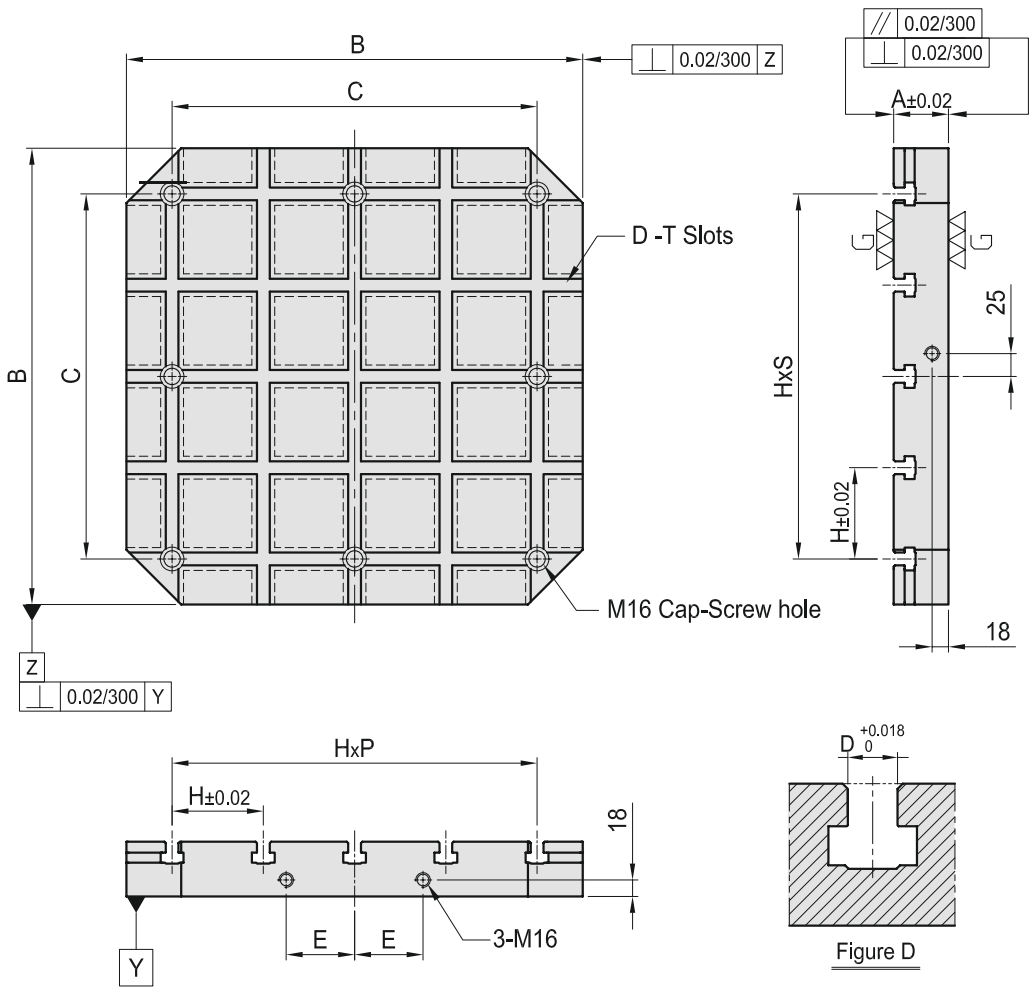

Figure D

MODEL	A	B	C	D	E	F	G	MOUNTING HOLES	kg
BPT/SQ/400	60	400	320	55	80	4	4	4	56
BPT/SQ/500		500	400	75	100			8	90
BPT/SQ/630	75	630	500	100	125	4	4	8	150
BPT/SQ/800		800	640	135	160				230

Note : C Value as per Customer Requirment

BPG/SQ

Square Base Plate - Grid Hole



- Materia l : Cast iron GG30(DIN) / C45
- Heat Treated (Normalised)
- Features :
  - Alignment bushing
  - Threaded insert
  - MTP hole spacing: 50 + 0.02
  - Grid holes available in M12 & M16
  - Easily adapts to standardized
  - Jig components
- Application : Horizontal machining center

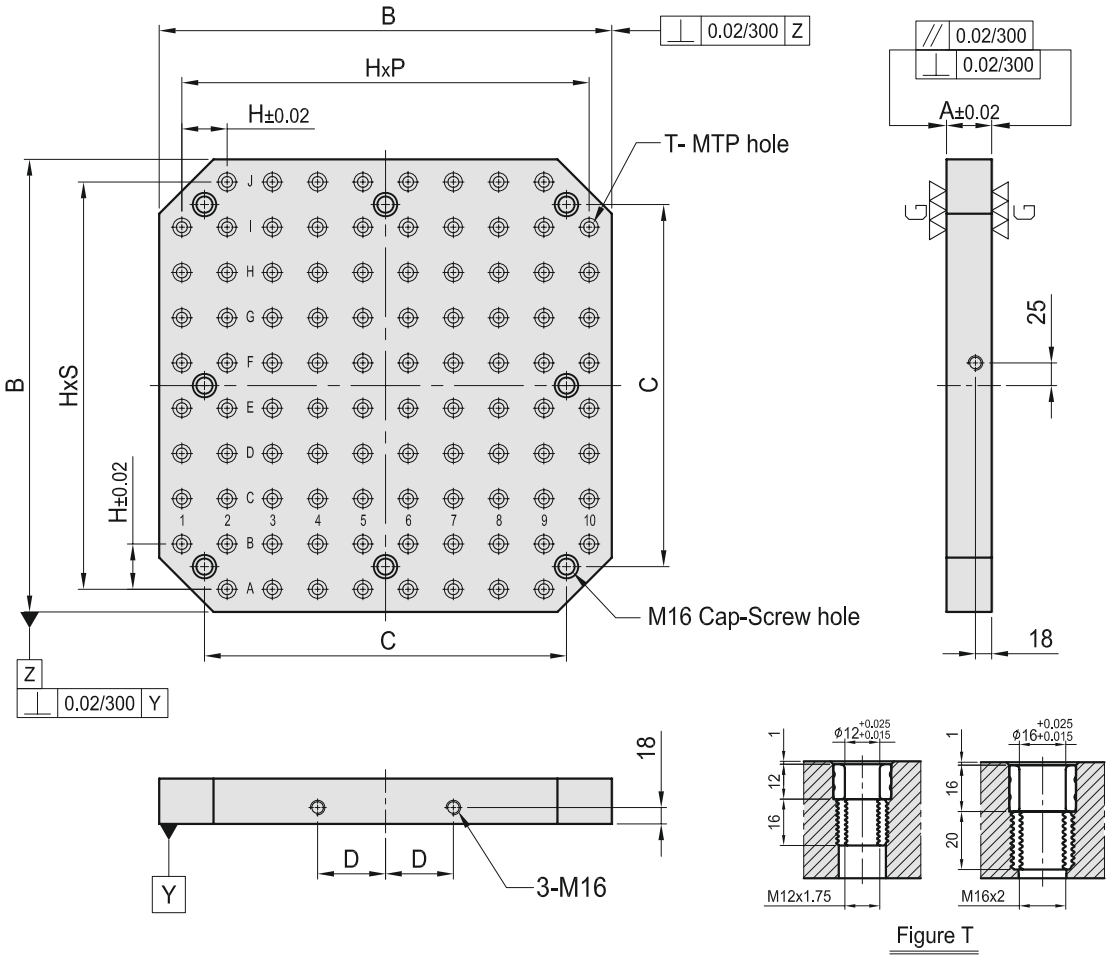

Figure T

MODEL	A	B	C	D	E	F	G	MTP	MOUNTING HOLES	kg
BPT/SQ/400	50	400	320	55	50	7	7	59	4	54
BPT/SQ/500		500	400	75		9	9	93	8	83
BPT/SQ/630	50	630	500	100	50	11	11	139	8	135
BPT/SQ/800		800	640	135		15	15	237		206

Note : C Value as per Customer Requirment

BPP/R

Round Base Plate-plane

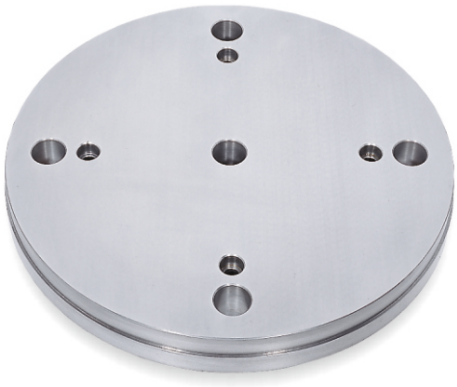

- Material : Cast iron GG30(DIN) / C45
- Heat Treated (Normalised)
- Features : • Can be special ordered with any size
  • Thickness available from 35mm to 50mm
- Application : Nc rotory table or Indexer

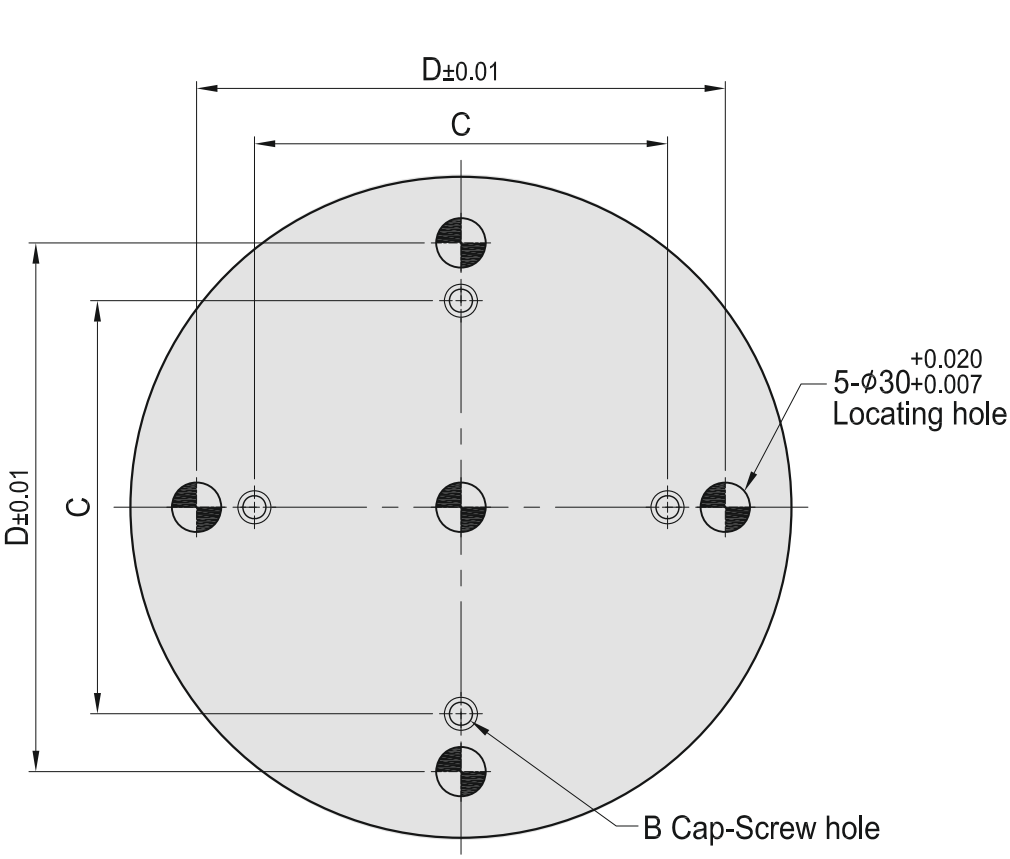

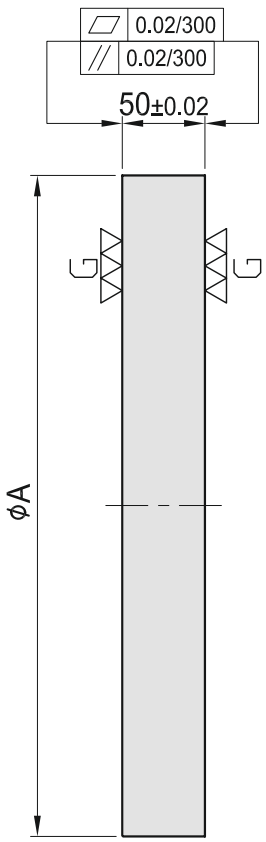

MODEL	A	B	C	D	kg
BPP/R/D300	300	M12	150	220	25
BPP/R/D400	400		250	320	40
BPP/R/D500	500	M16	300	400	65
BPP/R/D600	600		400	500	95

Round Base Plate - Grid Hole



- Materia l : : Cast iron GG30(DIN) / C45
- Heat Treated (Normalised)
- Features : • Alignment bushing
  - Threaded insert
  - MTP hole spacing: 50 + 0.02
  - Grid holes available in M12 & M16
  - Easily adapts to standardized
  - Jig components
- Application : NC rotary table or indexer

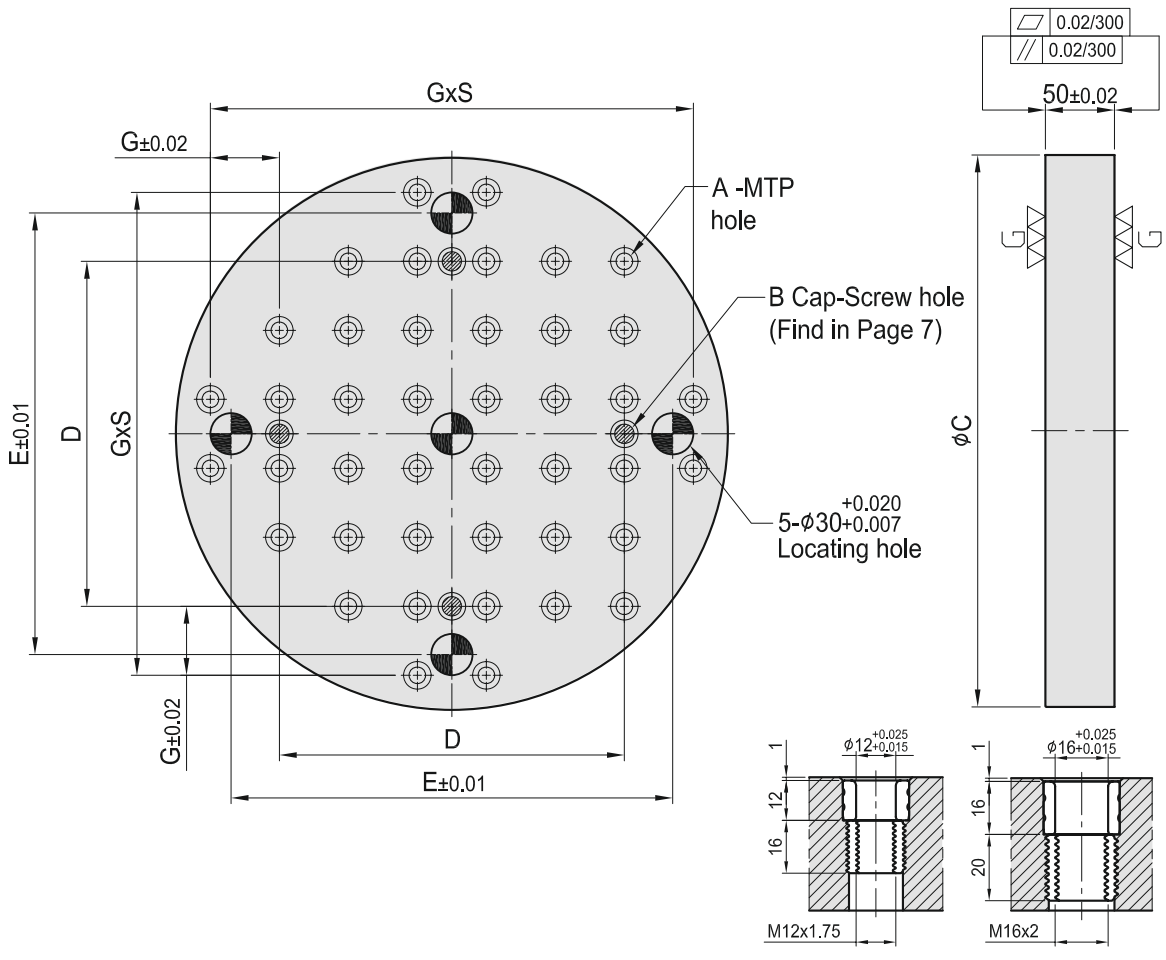

Figure A

MODEL	A		B	C	D	E	F	MTP	kg
BPG/R/D300	ø 12	M12	300	150	220	50	5	24	23
BPG/R/D400			400	250	320		7	44	42
BPG/R/D500	ø 12	M12	500	300	400	50	9	68	70
BPG/R/D600			600	400	500		11	96	98
BPG/R/D500	ø 16	M16	500	300	400	50	9	68	68
BPG/R/D600			600	400	500		11	96	95

BPT/R

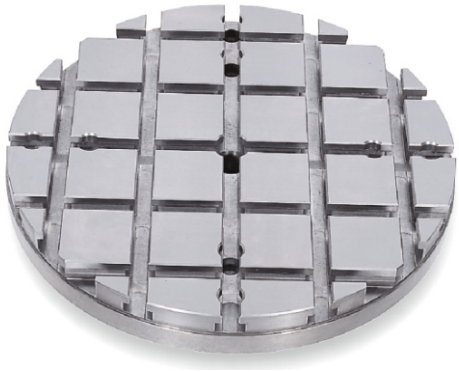

Round Base Plate - T- slot

- Material : Cast iron GG30(DIN)/C45
- Heat Treated (Normalised)
- Features : • T-slots available in 14 & 18 (J)
  - • T-slots running in 2 directions
  - • Easily adapts to standardized jig components
- Application : NC rotary table or indexer

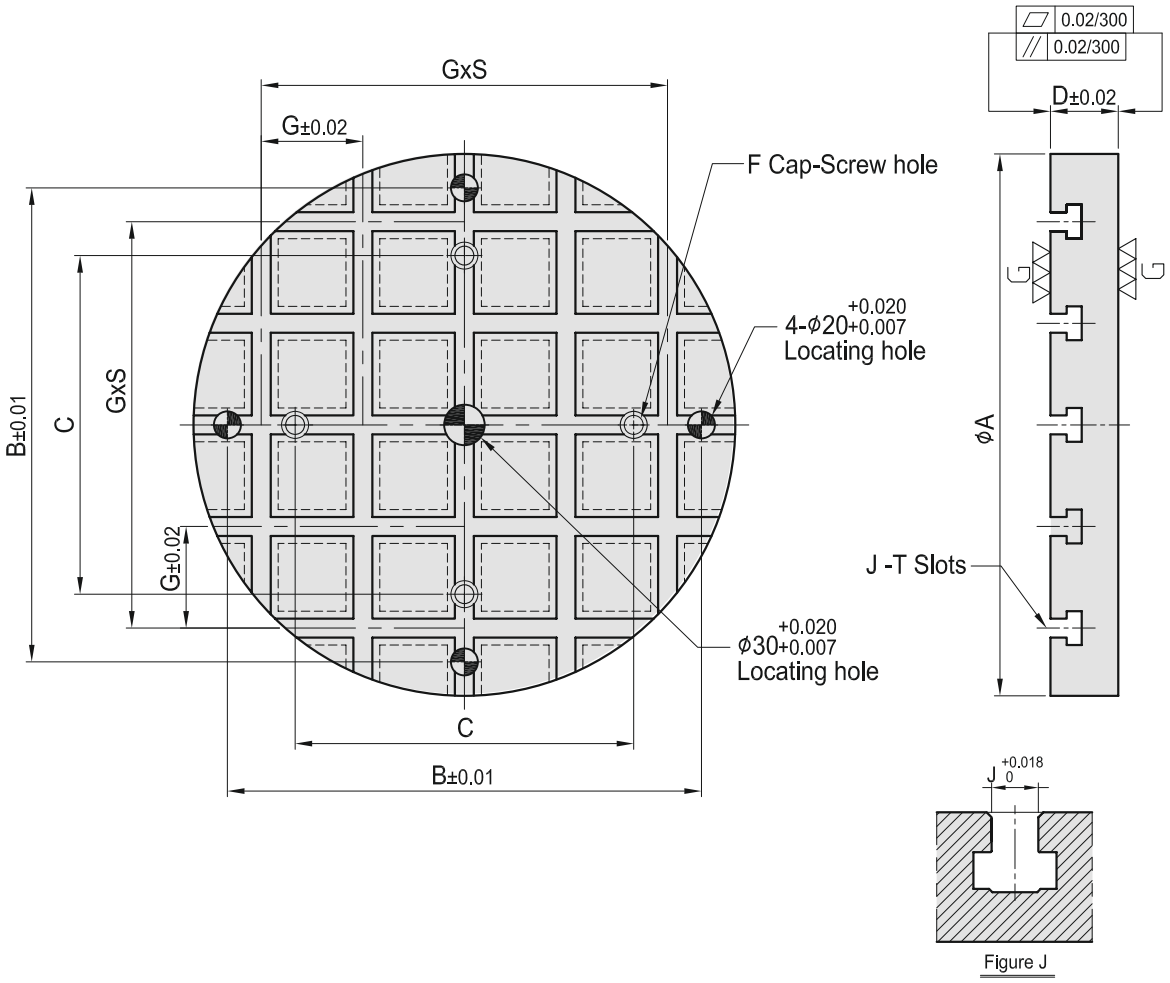

MODEL	A	B	C	D	E	F	G	kg
BPT/R/D300	300	250	150	50	M 12	75	2	22
BPT/R/D400	400	350	250				4	36
BPT/R/D500	500	450	300	65	M 16	100	4	74
BPT/R/D600	600	550	400					110

TSP/SQ

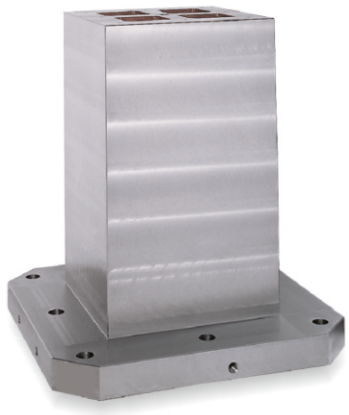

Square Clamping Column - Plane

- Material : Cast iron GG30(DIN)
- Heat Treated (Normalised)
- Features : • Fully machined on all sides
  - Side edge locating holes on base
  - Top cover to keep out chips and coolant
- Eye bolt for lifting
- Application : Horizontal machining center

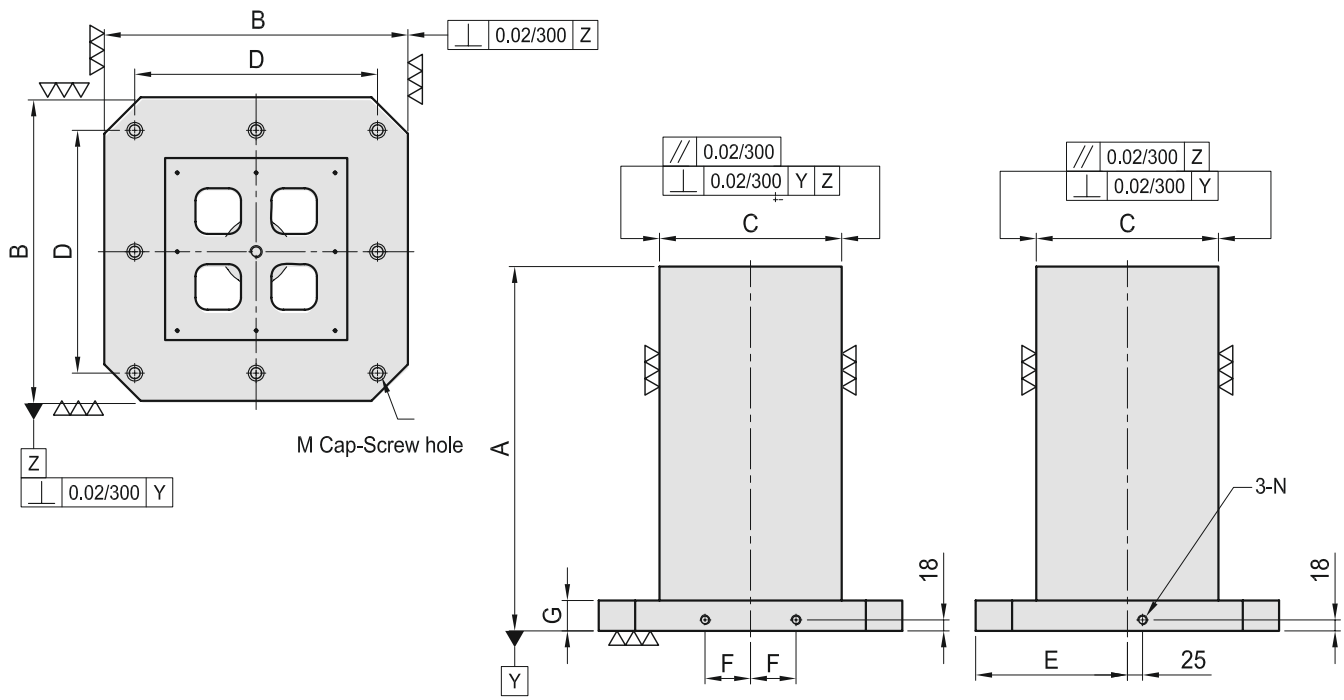

MODEL	A	B	C	D	E	F	G	M	N	MOUNTING HOLES	Weight in kg Cast Iron
TSP/SQ/150	500	300	150	250	150	40	50	M 12	M 12	4	90
TSP/SQ/250	500	400	250	320	200	55	50	M 16	M 16	4	160
	650										210
TSP/SQ/300	600	500	300	400	250	75	50	M 16	M 16	8	250
TSP/SQ/350	700	630	350	500	315	100	50	M 16	M 16	8	400

TSG/SQ



Square Clamping Column - Grid Hole

- Material : Cast iron GG30(DIN)
- Heat Treated (Normalised)
- Features : • Alignment bushing
  - Threaded inserts
  - MTP hole spacing: 50+0.02
  - Grid holes available in M12 & M16
  - Eye bolt & top cover included
  - Easily adapts to standardized
  - Jig components
- Application : Horizontal machining center

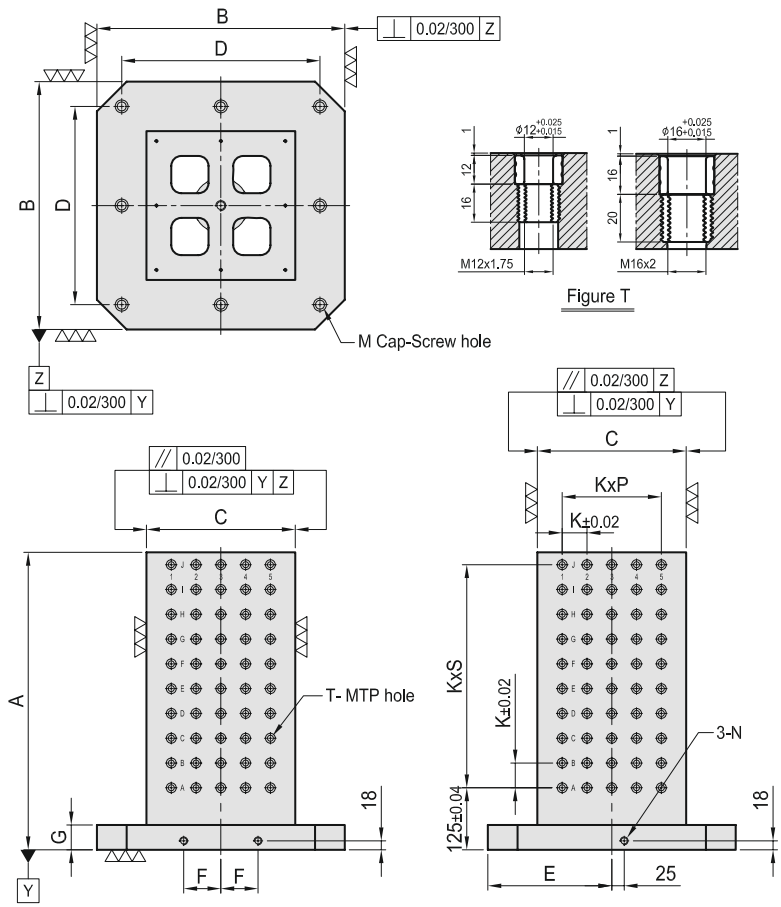

MODEL	A	B	C	D	E	F	G	K	P	S	M	N	MOUNTING HOLES	Weight in kg Cast Iron
TSG/SQ/150	500	300	150	250	150	40	50	50	1	7	M 12	M 12	4	90
TSG/SQ/250	500	400	250	320	200	55	50	50	3	7	M 16	M 16	4	155
	650													200
TSG/SQ/300	600	500	300	400	250	75	50	50	4	9	M 16	M 16	8	240
TSG/SQ/350	700	630	350	500	315	100	50	50	5	11	M 16	M 16	8	360



Square Clamping Column - T-slot

- Material : Cast iron GG30(DIN)
- Heat treated (Normalized)
- Features : • T-slot available in 14 & 18 (J)
  - T-slot running horizontally
  - Key-way running vertically
  - Easily adapts to standardized jig components
  - Eye bolt & top cover included
- Application: Horizontal machining center

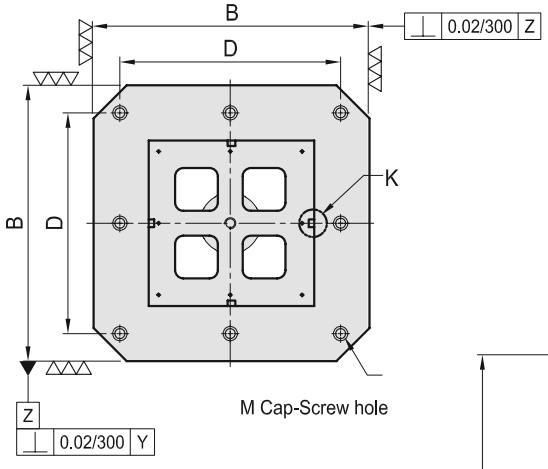

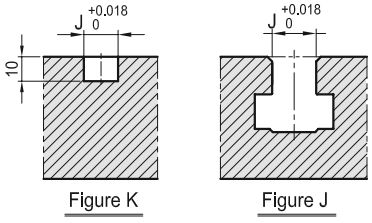

Figure K

Figure J

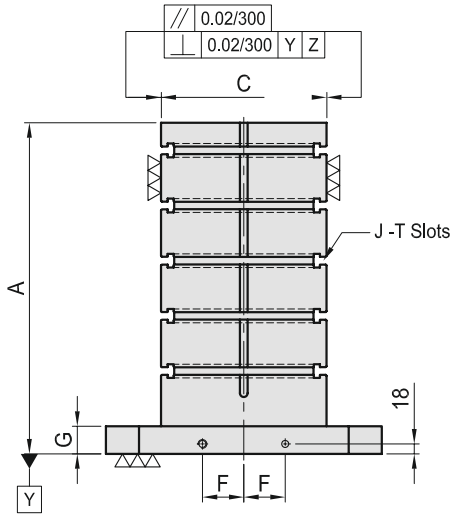

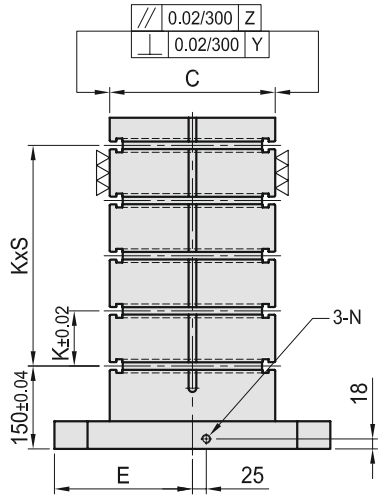

MODEL	A	B	C	D	E	F	G	M	N	K	S	MOUNTING HOLES	Weight in kg Cast Iron
TST/SQ/250	500	400	250	320	200	55	50	M 16	M 16	100	3	4	160
	650												210
TST/SQ/300	600	500	300	400	250	75	50	M 16	M 16	100	4	8	270
TST/SQ/350	700	630	300	500	315	100	50	M 16	M 16	125	4	8	375

TSP/RT



Double Sided
Clamping Column - Plane

- Material : Cast iron GG30(DIN)
- Heat Treated (Normalised)
- Features :
  - Fully machined on all sides.
  - Side edge locating holes on base.
  - Top cover to keep out chips and coolant
  - Eye bolt for lifting.
- Application : Horizontal machining center

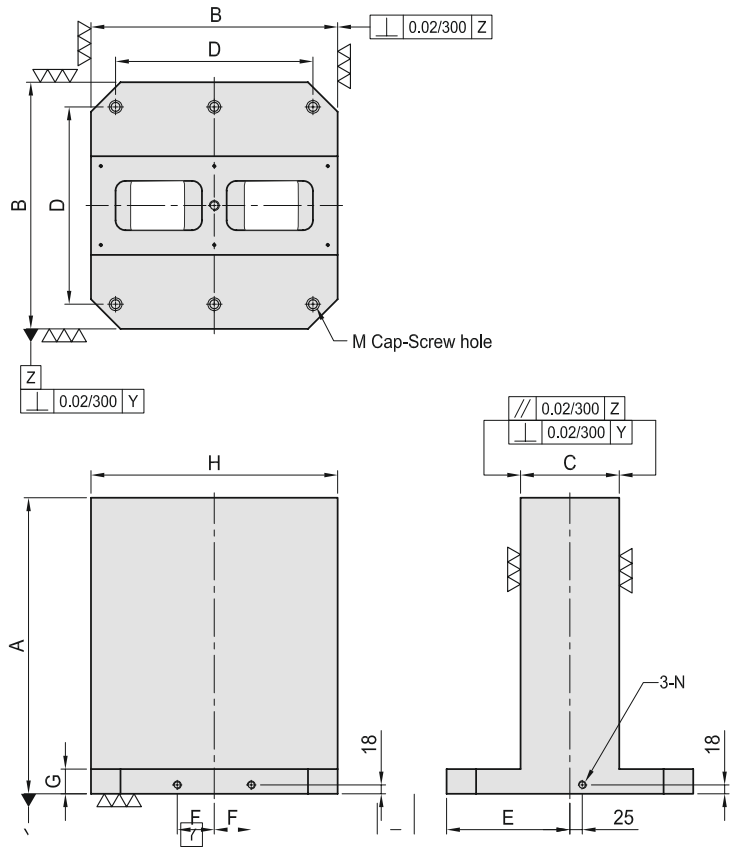

MODEL	A	B	C	D	E	F	G	M	N	MOUNTING HOLES	Weight in kg Cast Iron
TSP/RT/80300	500	300	80	250	150	40	50	M 12	M 12	4	115
TSP/RT/150400	500	400	150	320	200	55	50	M 16	M 16	4	170
	650										215
TSP/RT/200500	600	500	200	400	250	75	50	M 16	M 16	8	270
TSP/RT/250630	700	630	250	500	315	100	50	M 16	M 16	8	445



Double Sided
Clamping Column - Grid Hole

- Material : Cast iron GG30(DIN)
- Heat Treated (Normalised)
- Features :
  - Alignment bushing
  - Threaded insert
  - MTP hole spacing: 50 +0.02
  - Grid holes available in M12 & M16
  - Easily adapts to standardized jig components
  - Eye bolt & top cover included.
- Application : Horizontal machining center

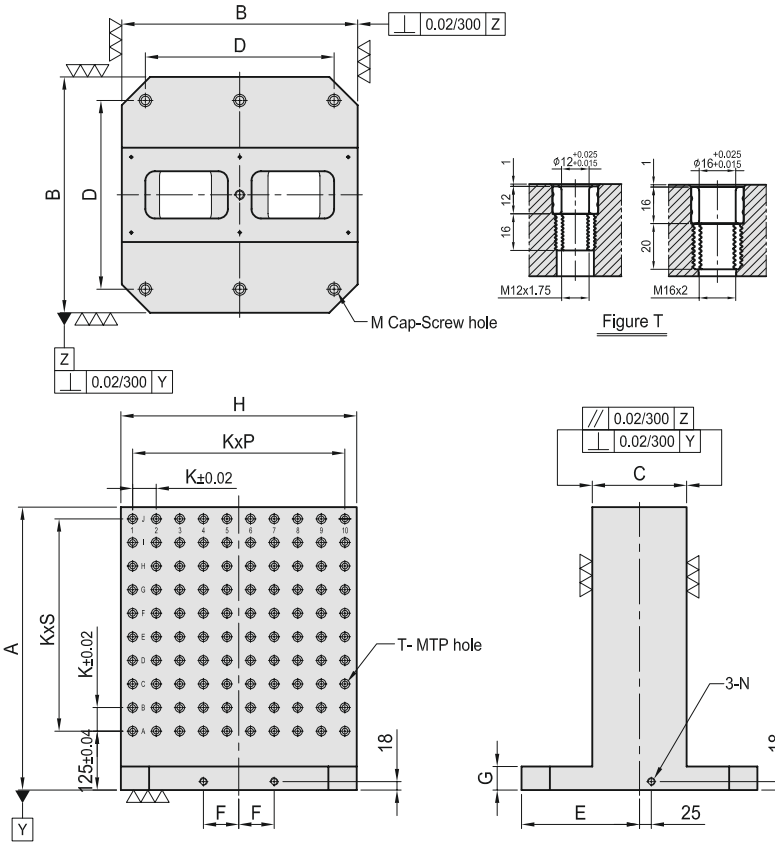

MODEL	A	B	C	D	E	F	G	H	K	P	S	M	N	MTP	MOUNTING HOLES	Weight in kg Cast Iron
TSG/RT/80300	500	300	80	250	150	40	50	300	50	5	7	M 12	M 12	96	4	110
TSG/RT/150400	500	400	150	320	200	55	50	400	50	3	7	M 16	M 16	128	4	165
	650													176		
TSG/RT/200500	600	500	200	400	250	75	50	500	50	4	9	M 16	M 16	200	8	265
TSG/RT/250630	700	630	250	500	315	100	50	630	50	5	50	M 16	M 16	288	8	435

TST/RT



Double Sided
Clamping Column - T - slote

- Material: Cast iron GG30(DIN)
- Heat treated (Normalized)
- Features :
  - T-slot available in 14 & 18 (J)
  - T-slot running horizontally
  - Key-way running vertically
  - Easily adapts to standardized jig components
  - Eye bolt & top cover included
- Application: Horizontal machining center

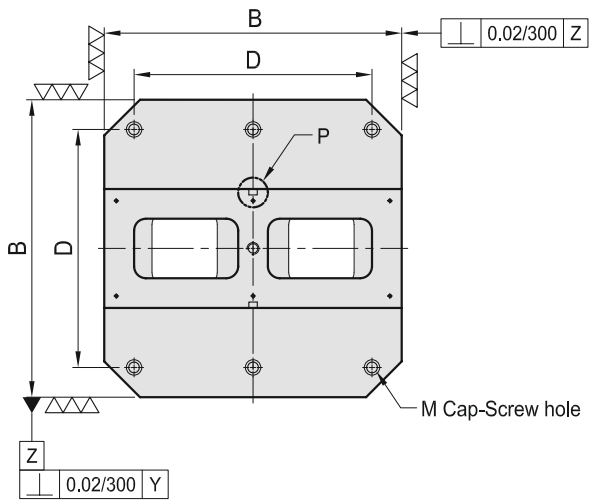

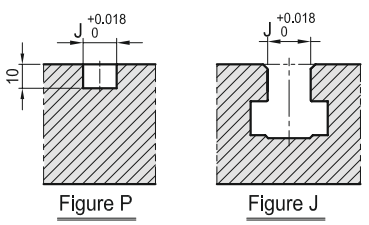

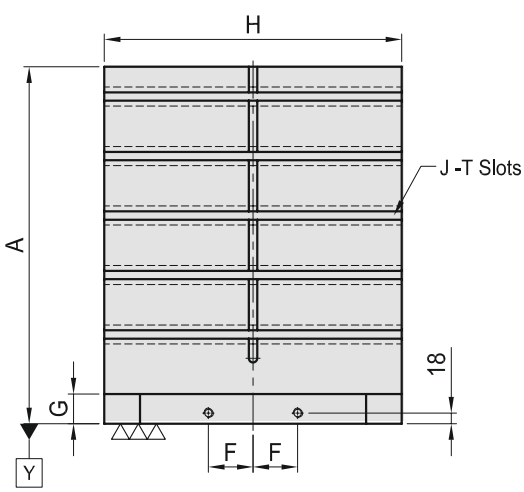

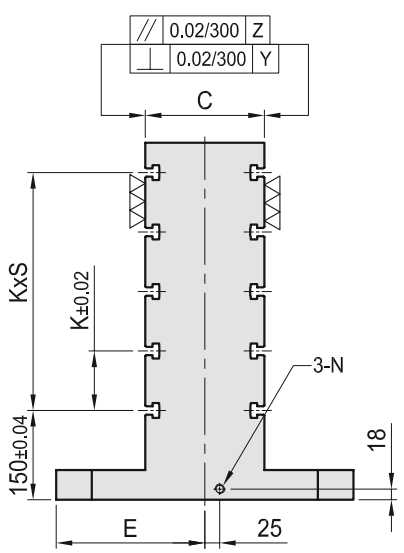

MODEL	A	B	C	D	E	F	G	M	N	H	K	S	MOUNTING HOLES	Weight in kg Cast Iron
TST/RT/150400	500	400	150	320	200	55	50	M 16	M 16	400	100	3	4	170
	650													220
TSP/RT/200500	600	500	200	400	250	75	50	M 16	M 16	500	100	4	8	290
TSP/RT/250630	700	630	250	500	315	100	50	M 16	M 16	630	125	4	8	440

Angle Plate Plane



Double Sided
Clamping Column - T - slote

- Material : Cast Iron GG 30 (DIN)
- Heat treated (Normalized)
- Features : • Can be special order with any size
  • MTP hole
- Application: Horizontal machining center

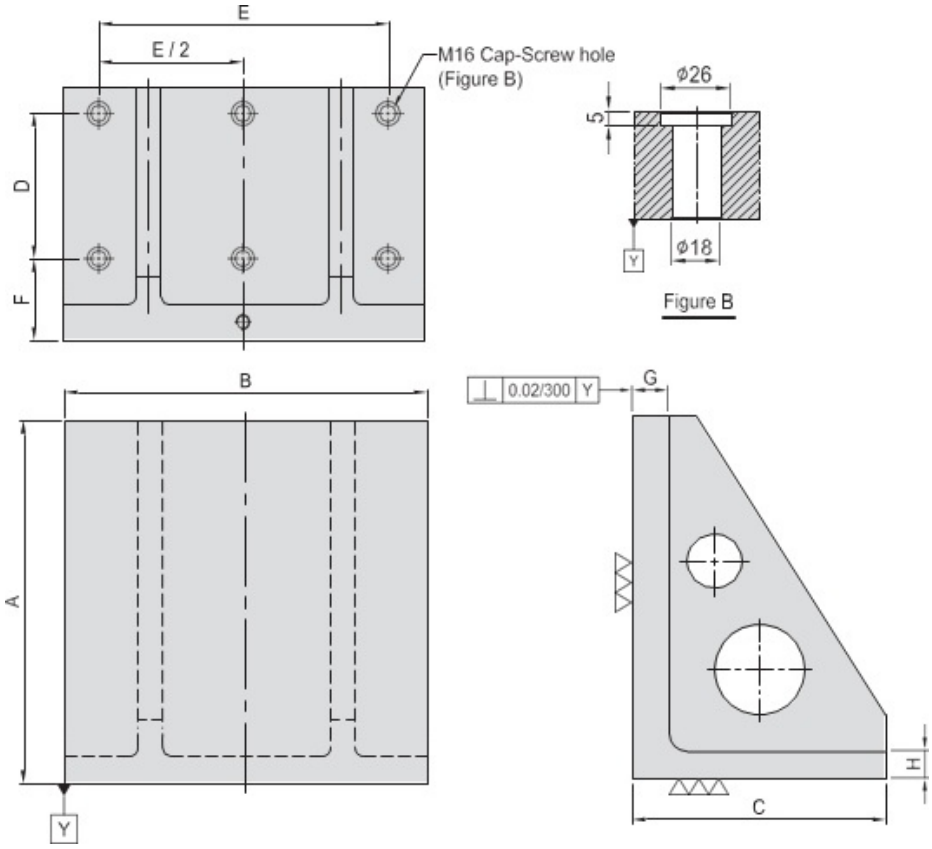

MODEL	A	B	C	D	E	F	G	H	MOUNTING HOLES	Kg
APP/SQ/400400	400	400	280	160	320	90	40	30	6	90
APP/SQ/500500	500	500	340	200	400	90	50	35	6	165
APP/SQ/630630	630	630	435	250	500	100		40		275
APP/SQ/800800	800	800	525	320	640	115	50	45	6	475

Angle Plate T-Slot



- Material : Cast Iron GG 30 (DIN)
- Heat treated (Normalized)
- Features : • T-slots available in M14 & M14
  - T-slots running horizontally
  - Key-way running vertically
  - Easily adapts to standardized jig components.

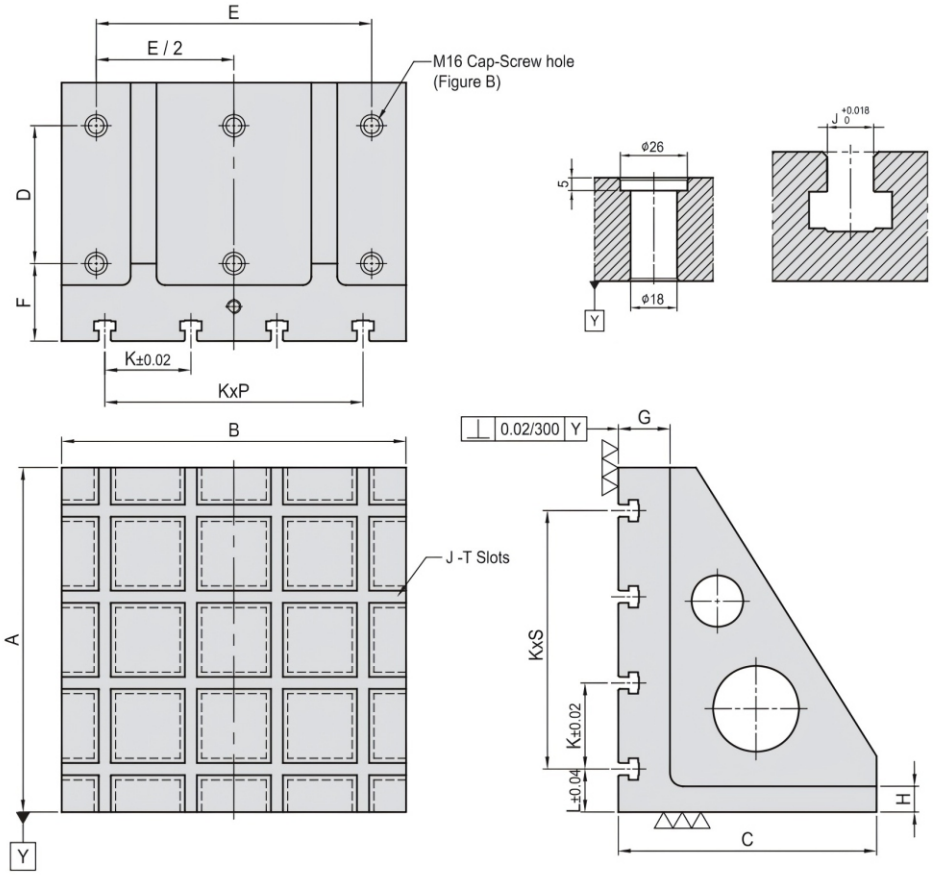

MODEL	A	B	C	D	E	F	G	H	J	K	L	P	S	MOUNTING HOLES	Kg
APT/SQ/400400-14	400	400	300	160	320	90	60	30	14	100	50	3	3	6	101
APT/SQ/500500-14	500	500	350	200	400	90	66	35	14	100	50	4	4	6	170
APT/SQ/630630-14	630	630	450	250	500	100	65	40		125	65	4	4		295
APT/SQ/800800-14	800	800	550	320	640	115	75	45	14	150	100			6	566
APT/SQ/400400-18	400	400	300	160	320	90	60	30	18	100	50	3	3	6	96
APT/SQ/500500-18	500	500	350	200	400	90	60	35	18	100	50	4	4	6	162
APT/SQ/630630-18	630	630	450	250	500	100	65	40		125	65	4	4		285
APT/SQ/800800-18	800	800	550	320	640	115	75	45	18	150	100			6	55

Angle Plate Grid Hole

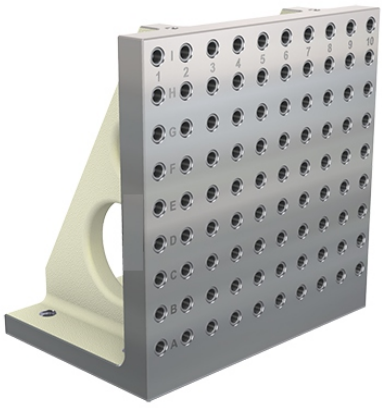

- Material : Cast Iron GG 30 (DIN)
- Heat treated (Normalized)
- Features : • Alignment bushing
  - Threaded insert
  - MTP hole spacing: 50+0.02
  - Grid holes available in M12 & M16
  - Easily adapts to standardized jig component
- Application : Horizontal machining centre

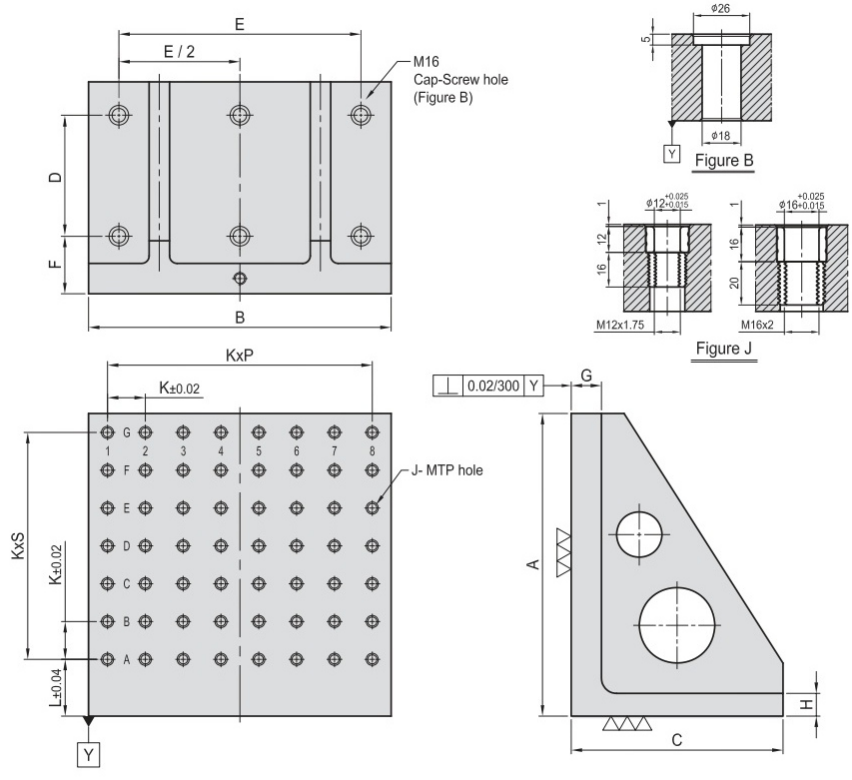

MODEL	A	B	C	D	E	F	G	H	J		K	L	P	S	MTP	MOUNTING HOLES	Kg
APG/SQ/400400-12	400	400	280	160	320	90	40	30	ø 12	M12	50	75	7	6	56	6	87
APG/SQ/500500-12	500	500	340	200	400	90	50	35	ø 12	M12	50	75	9	8	90	6	173
APG/SQ/630630-12	630	630	435	250	500	100		40				40	11	11	144		300
APG/SQ/800800-12	800	800	525	320	640	115	50	45	ø 12	M12	50	75	15	14	240	6	477
APG/SQ/400400-16	400	400	280	160	320	90	40	30	ø 16	M16	50	75	7	6	56	6	85
APG/SQ/500500-16	500	500	340	200	400	90	50	35	ø 16	M16	50	75	9	9	90	6	170
APG/SQ/630630-16	630	630	435	250	500	100		40				40	11	11	144		295
APG/SQ/800800-16	800	800	525	320	640	115	50	45	ø 16	M16	50	75	15	14	240	6	470

Riser-Table T-Slot

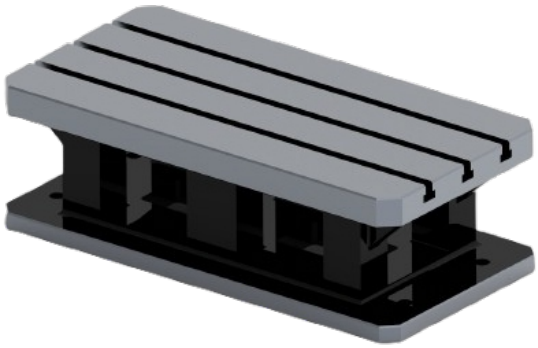

- Material : Cast iron GG30(DIN)
- Heat treated (Normalized)
- Features : • T-slots available in 14 & M18 mm
  - Ready to accept a hole pattern
  - T-slot pattern for your special jig
  - Available in custom sizes
- Application : Vertical machine centres
  Horizontal machine centres
  Special purpose machines

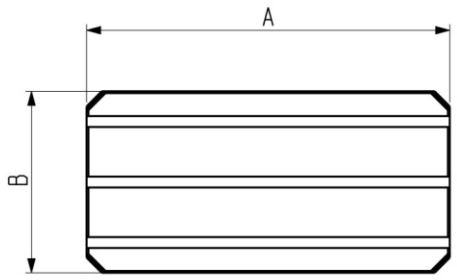

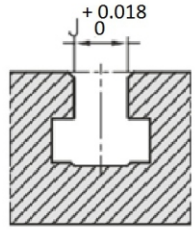

Figure J

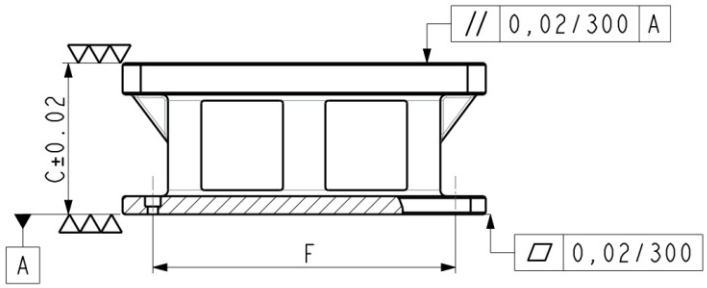

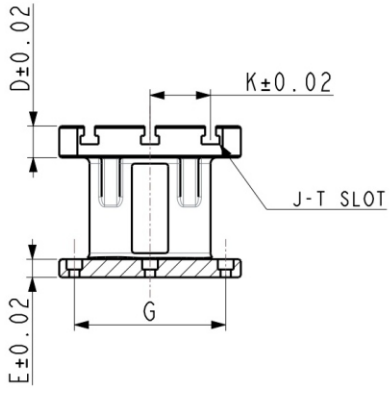

MODEL	A	B	C	D	E	F	G	K	kg
RTT/SQ/400400/250	400	400	250	52	30	–	–	50	94
RTT/SQ/500500/250	500	500	250	52	30	–	–	50	102
RTT/RT/600300/250	600	300	250	52	30	–	–	50	132
RTT/RT/800400/250	800	400	250	52	30	–	–	50	230
RTT/RT/1000500/250	1000	500	250	52	30	–	–	50	370

Note : F, G Values as per customer's requirement

Riser-Table Grid Hole

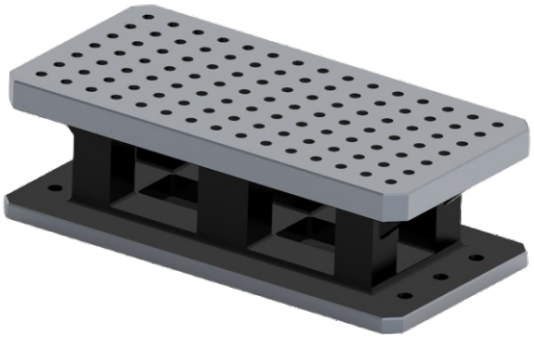

- Material : Cast iron GG30(DIN)
- Heat treated (Normalized)
- Features : • Alignment bushing
  - Threaded insert
  - MTP Hole Spacing: 50± 0.02
  - Grid holes available in M12 & M16
  - Easily adapts to standardized
  - Jig components
- Application : Vertical machine centres
  Horizontal machine centres

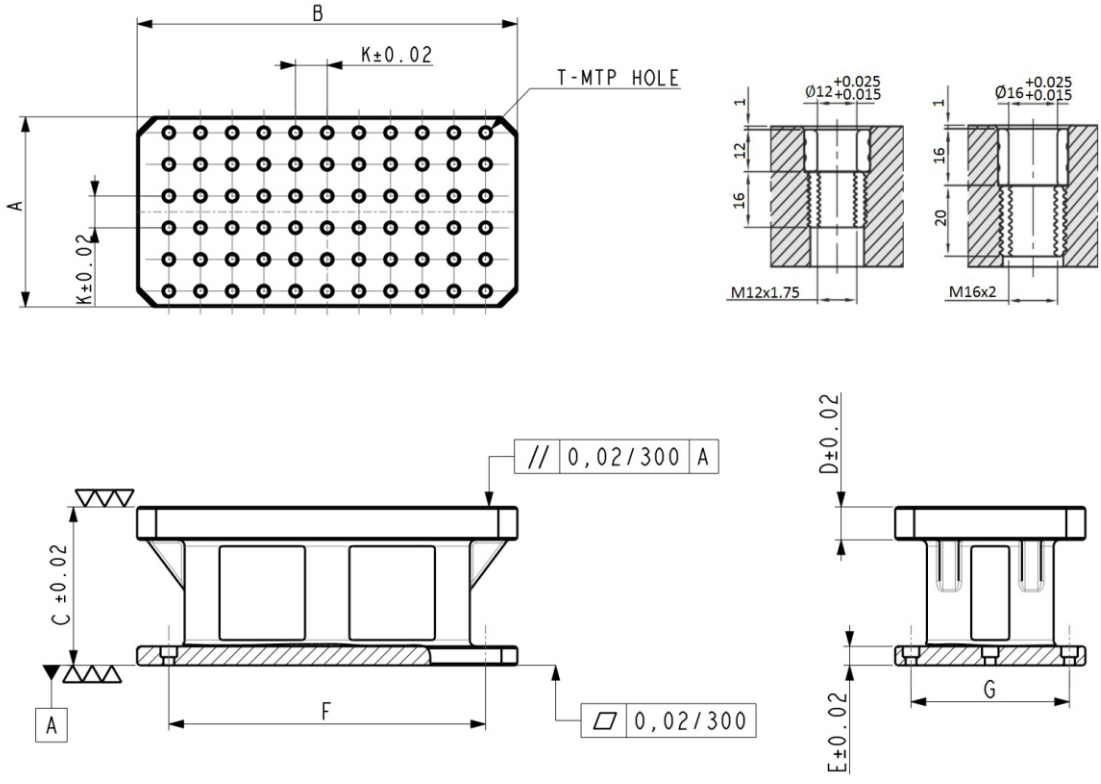

MODEL	A	B	C	D	E	F	G	K	kg
RTG/SQ/400400/250	400	400	250	52	30	–	–	50	94
RTG/SQ/500500/250	500	500	250	52	30	–	–	50	102
RTG/RT/600300/250	600	300	250	52	30	–	–	50	135
RTG/RT/800400/250	800	400	250	52	30	–	–	50	233
RTG/RT/1000500/250	1000	500	250	52	30	–	–	50	382

Note : F, G Values as per customer's requirement

Specifications

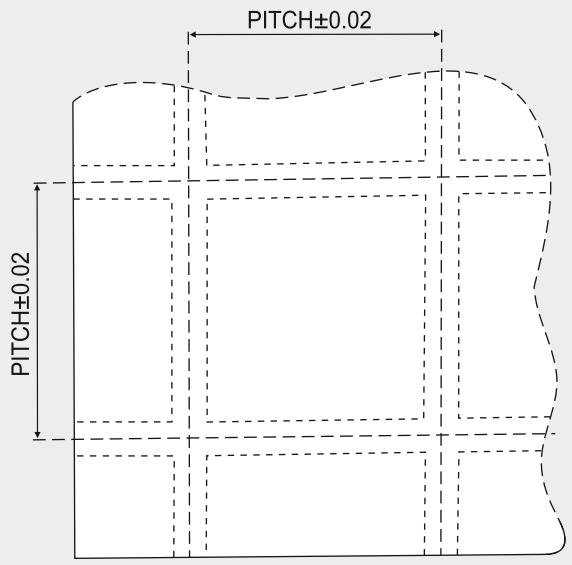

M12 TYPE

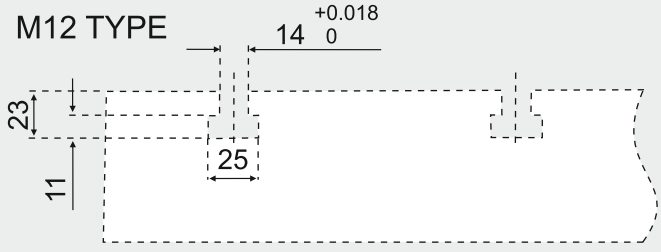

M16 TYPE

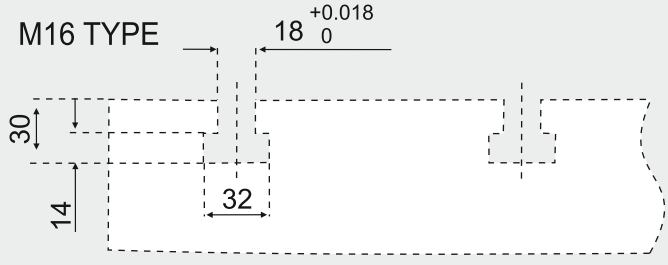

M12 Cap-Screw hole

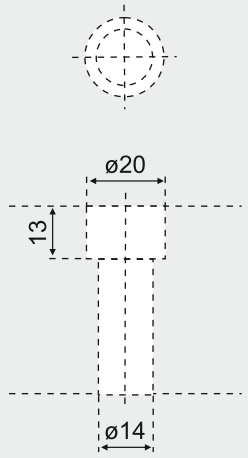

M16 Cap-Screw hole

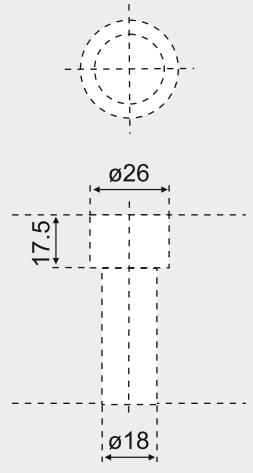

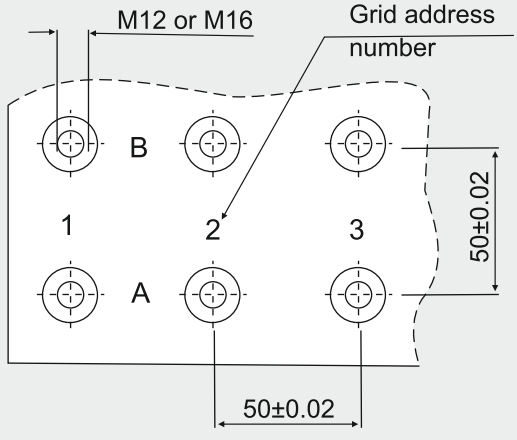

ø12 MTP hole

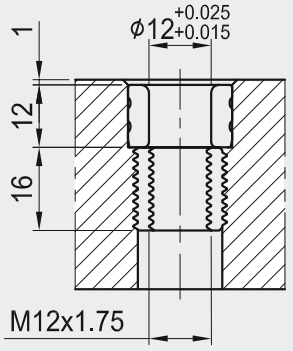

ø16 MTP hole

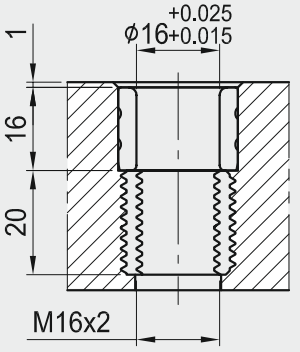

WEDGE CLAMP

Clamping Made Easy

Working Principle

Wedge clamp functions on the principle that it expands as cap screw is tightened down which moves centre clamping wedge downwards and simultaneously both jaws slide outwards and clamp the work piece firmly. Tightening and loosening of cap screw will return the centre clamping wedge over an internal return spring to its original position so the clamping method is very effective and time saving

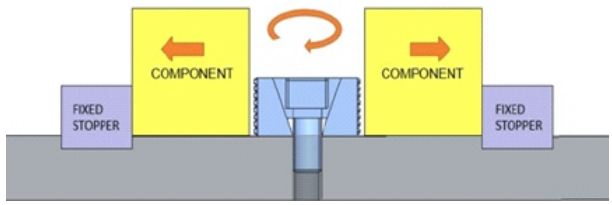

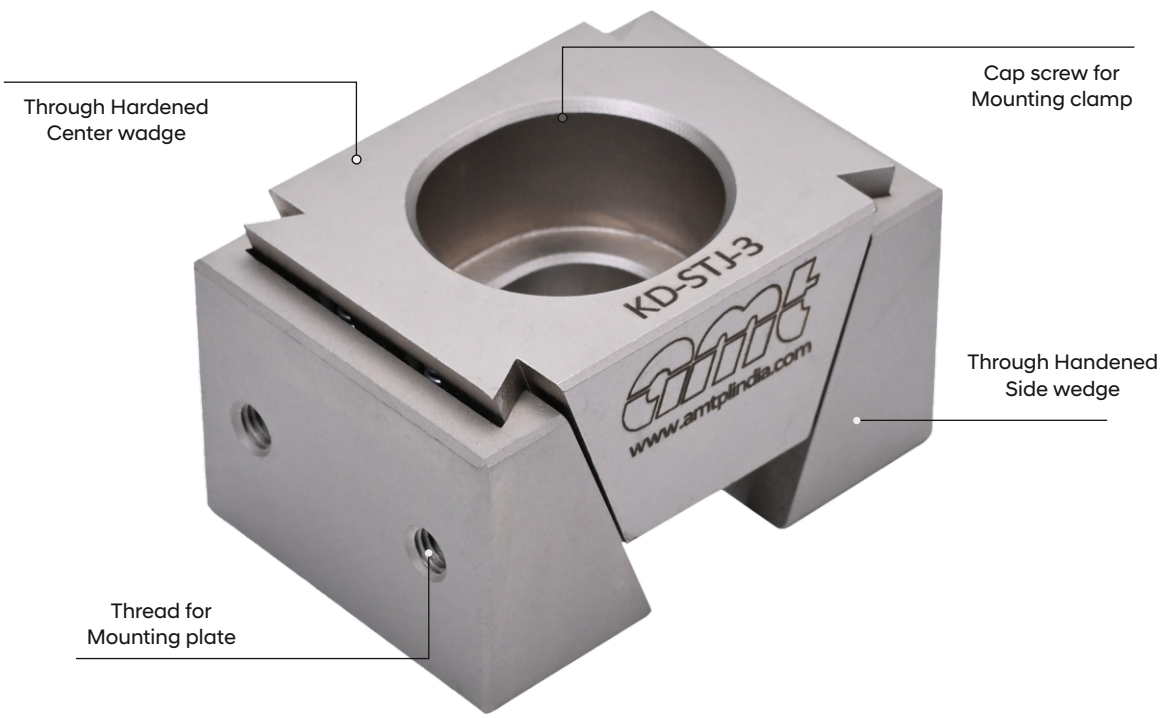

Application

- Generic & dedicated fixturing for VMC, HMC & 5 axis machines.
- For designing fixtures for inspection & quality labs.

Product Features

- Tool grade steel body.
- Hardened with electroless nickel plating.
- Expands evenly and apply balanced workholding pressure.
- Free tool access to the workpiece.
- Cross wedge structured design clamps workpiece firm
- Light in weight with quick setup time.
- Ideal for multiple clamping but also suitable for individual clamping.
- Chip free design (Internal return springs).

WEDGE CLAMP WITH STANDARD JAWS (KD-STJ)

Product Features

Wedge clamp is provided with smooth clamping face & fastening screw thread is provided to accommodate various additional customized jaws to workpiece geometry.

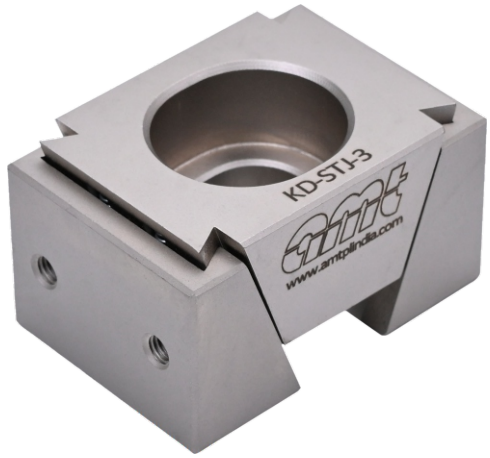

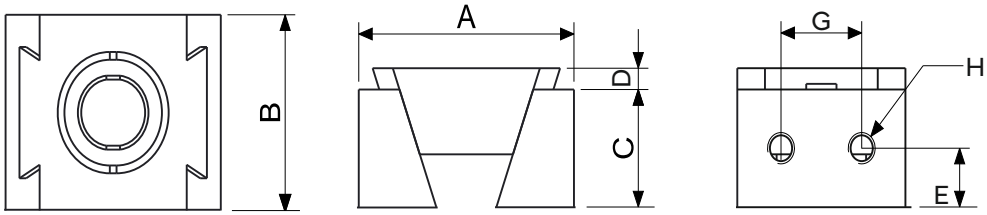

MODEL	A			B	C	D	E	G	H	CLAMPING SCREW (DIN 912)	TIGHTENING TORQUE (Nm)	CLAMPING FORCE (KN)	WEIGHT (gm)
	MIN	MEAN	MAX										
KD-STJ-1	32	34	36	25	15	4	7.5	12	4 X M4	M8	20	15	70
KD-STJ-2	42	45	48	30	24	4	11.5	12	4 X M4	M12	65	30	165
KD-STJ-3	56	60	64	40	30	4	15	24	4 X M5	M16	120	50	390

WEDGE CLAMP WITH SERRATED JAWS (KD-SJ)

Technical Specifications

Wedge clamp with serrated jaws is a special purpose clamp. Serrations on both sides of the jaws hold workpiece firmly in any condition as they create high friction.

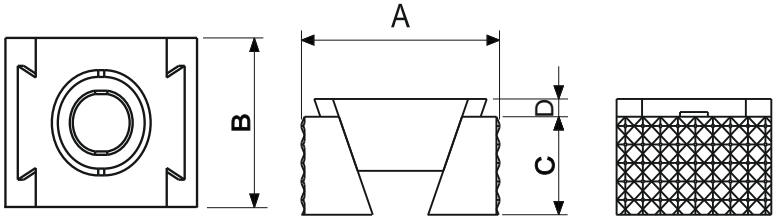



MODEL	A			B	C	D	CLAMPING SCREW (DIN 912)	TIGHTENING TORQUE (Nm)	CLAMPING FORCE (KN)	WEIGHT (gm)
	MIN	MEAN	MAX							
KD-SJ-1	32	34	36	25	15	4	M8	20	15	70
KD-SJ-2	42	45	48	30	24	4	M12	65	30	165
KD-SJ-3	56	60	64	40	30	4	M16	120	50	390

Note : Produce and promoted by AMT

STAINLESS STEEL WEDGE CLAMP WITH STANDARD JAWS (KD-STJ-SS)

Technical Specifications

- Wedge clamp is provided with smooth clamping face & fastening screw thread is provided to accommodate various additional customized jaws to work piece geometry.
- Special made in stainless steel (SS 304) Material for medical, surgical and food industries



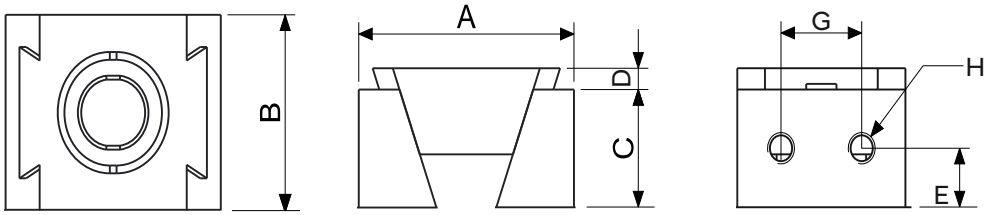

MODEL	A			B	C	D	E	G	H	CLAMPING SCREW (DIN 912)	TIGHTENING TORQUE (Nm)	CLAMPING FORCE (KN)	WEIGHT (gm)
	MIN	MEAN	MAX										
KD-STJ-SS-1	32	34	36	25	15	4	7.5	12	4 X M4	M8	20	15	70
KD-STJ-SS-2	42	45	48	30	24	4	11.5	12	4 X M4	M12	65	30	165
KD-STJ-SS-3	56	60	64	40	30	4	15	24	4 X M5	M16	120	50	390

- **Note :** Without Hardened and electro less nickel plating

STAINLESS STEEL WEDGE CLAMP WITH SERRATION JAWS (KD-SJ-SS)

Technical Specifications

- Wedge clamp with serrated jaws is a special purpose clamp. Serrations on both sides of the jaws hold workpiece firmly in any condition as they create high friction.
- Special made in stainless steel (SS 304) Material for medical, surgical and food industries

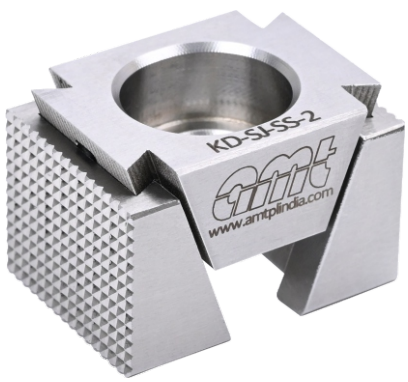

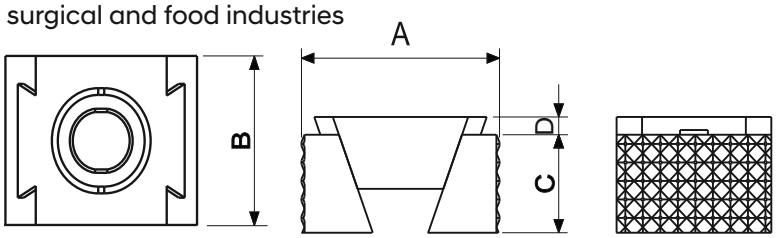

MODEL	A			B	C	D	CLAMPING SCREW (DIN 912)	TIGHTENING TORQUE (Nm)	CLAMPING FORCE (KN)	WEIGHT (gm)
	MIN	MEAN	MAX							
KD-SJ-SS-1	32	34	36	25	15	4	M8	20	15	70
KD-SJ-SS-2	42	45	48	30	24	4	M12	65	30	165
KD-SJ-SS-3	56	60	64	40	30	4	M16	120	50	390

Note : Produce and promoted by AMT

SELF ALIGNING WEDGE CLAMP

Scope of Application

- A Self-Aligning Wedge Clamp is a mechanical device designed to aligning and securely clamp components.
- Easy, fast, and uniform clamping without requiring exact positioning.
- Dedicated fixturing for VMC, HMC & 5 axis machines.



Product Feature

- Aligning to the shape and position of the component.
- Eliminates the need for precise manual alignment.
- Free tool access to the work piece.
- Wedge mechanism ensures strong, uniform pressure.
- Ideal for multiple clamping but also suitable for individual clamping.

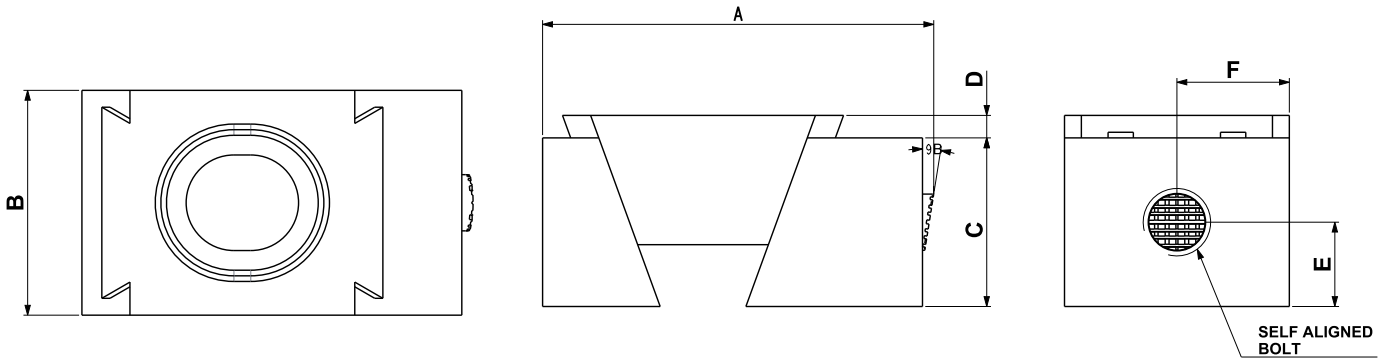

Model	A (mm)			B	C	D	E	F	Aligning Angle	Clamping Screw	Tigntening Torqe (Nm)	Clamping Force (kN)	WEIGHT gm
	MIN.	MEAN	MAX.										
KD-SA-3	68	70.5	76	40	30	4	15	20	9°	M16	120	50	500

Note : Produce and promoted by AMT

CAM SCREW WITH HEXAGON WASHER

Scope of Application

- Used in jigs, fixtures, and tool holding where repeatable and quick clamping.
- Allows easy repositioning and clamping of components like stops, locators, or part supports.
- Easy clamping.



Product Feature

- Alloy steel Hex washer and case hardened and plated.
- The minimal height of this fixture clamp enables numerous clamping problems in fixture and equipment construction to be solved. The brass hex washer offers a gentle yet extremely stable and safe clamping of work pieces. By using several fixture clamps entire pallets can be set-up.
- Clockwise rotation is recommended for clamping. The hex socket on the screw should be on the right after tightening. (Screw in the cam screw as far as it will go, then turn it back one turn).

"A" = distance from work piece to screw centre (cam screw)

Assembly

Clamping method:

1. Screw the cam screw in as far as it will go.
2. Screw the cam screw back one turn.
3. Position the work piece.
4. Turn the cam screw clockwise to clamp the work piece. (The hex socket on the cam screw should now be on the right).

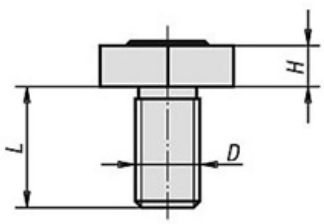

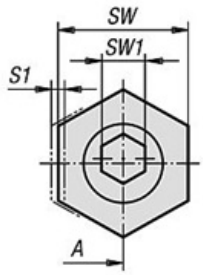

Model No.	A	D	H	L	SW	SW 1	S1 (Travel)	Clamping Force	Clamping Torque
EZ-HW-M12	12	M12	9.5	20	24	8	1	8.5 kN	40 Nm
EZ-HW-M16	15	M16	12.7	25	32	12	1.2	12.5 kN	60 Nm

Application Image

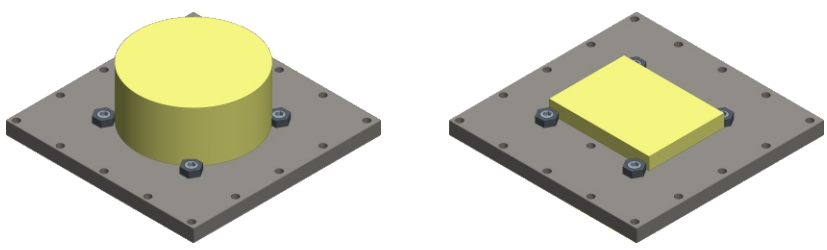

Note : Produce and promoted by AMT

Scope of Application

- Used in jigs, fixtures, and tool holding where repeatable and quick clamping.
- Allows easy repositioning and clamping of components like stops, locators, or part supports.
- Easy clamping.



Product Feature

- Alloy steel washer and case hardened.
- Easily used and clamping element.
- Fast adjustment.
- The hardened knife edge washer is suitable for clamping rough pieces (saw cut stock, castings, forgings etc.)
- Not designed for clamping hardened materials with the torque specified.
- Clockwise rotation is recommended for clamping. The hex socket on the screw should be on the right after tightening. (Screw in the cam screw as far as it will go, then turn it back one turn).

"A" = distance from work piece to screw centre (cam screw).

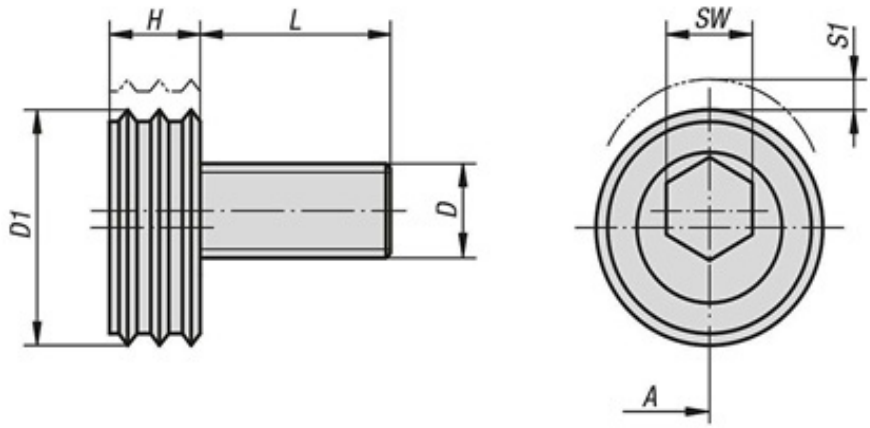

Model No.	A	D	D 1	H	L	SW	S1 (Travel)	Clamping Force	Clamping Torque
EZ-KEW-M12	12.7	M12	25.4	13	20	8	1	10 kN	40 Nm
EZ-KEW-M16	15.05	M16	30.1	13.8	20	12	1.2	12 kN	60 Nm

Application Image

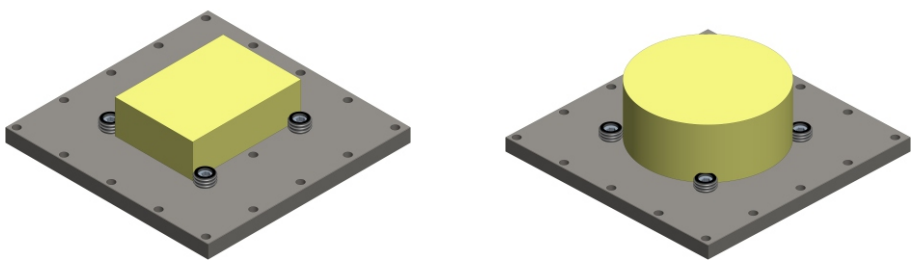

Note : Produce and promoted by AMT

Scope of Application

- A low-profile lateral clamp is used in jigs, fixtures, to hold work pieces securely without obstructing the top surface.
- Ideal for precision machining, CNC setups, milling tables, or modular fixturing systems



Product Feature

- Alloy steel clamps and toughened body.
- Jaw plates case-hardened.
- Easily used and clamping element.
- Fast adjustment.
- The jaws are reversible, smooth side for machined parts, serrated side for rough surfaces. We recommend using two bolts to mount the clamp to the machine table.

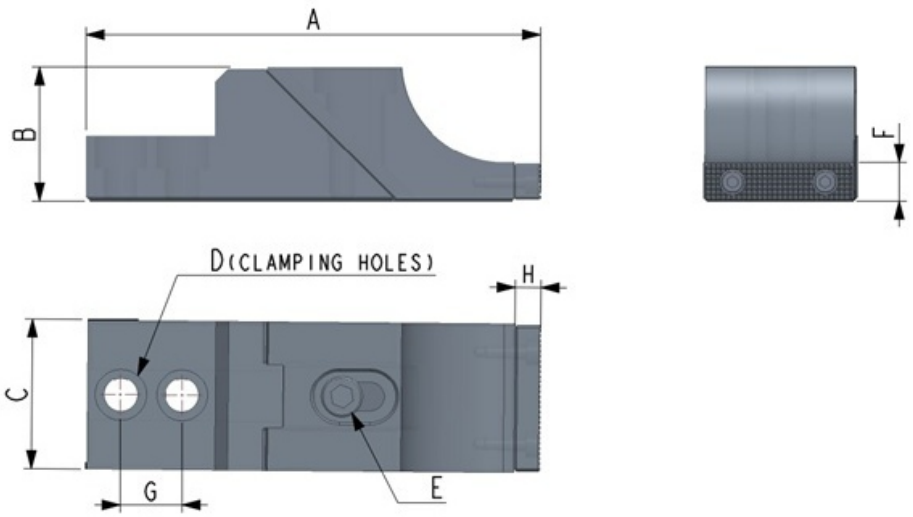

Model No.	A	B	C	D	E	F	G	H
EZ-LC-M 8	120	40	40	M 10	M 8	14	-	10
EZ-LC-M 10	177	52	58	M 12	M 10	14	24	10

Application Image

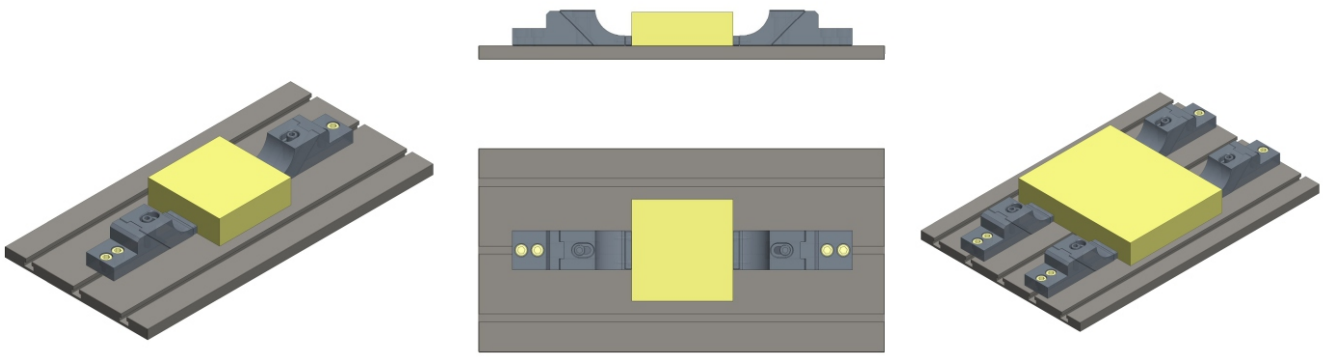

Note : Produce and promoted by AMT

Scope of Application



- Used as a position stopper or locator on machine tables.
- Enables fast and repeatable setup of steel or iron work pieces.
- Ideal for applications requiring frequent repositioning without complex clamping systems.
- No mechanical fastening required quick installation and adjustment.
- 1 axis, 2 axis easy used magnetic stopper

Product Feature

- Body high-strength aluminium and anodised.
- Stopper pin and stop bar plating.
- The work piece stop with enclosed magnet serves among other things, as a versatile instrument for positioning on machining centres or for assembly work.
- It adheres to all magnetic surfaces such as vices, measuring devices, drilling and milling machines. After clamping the work pieces, the work piece stop can also be easily removed again, thus exposing all surfaces to be machined.

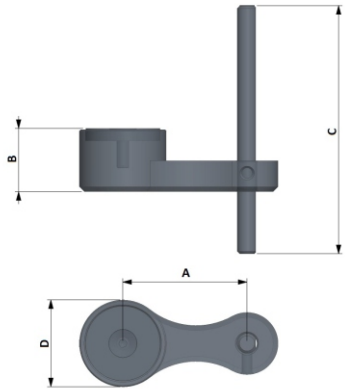

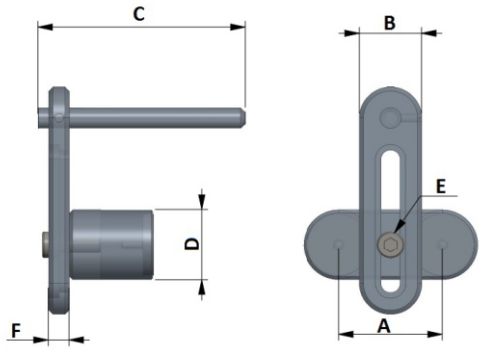

EZ-WS-01 **EZ-WS-02**

Model No.	A	B	C	D	E	F
EZ-WS-01	50	25	100	35	-	-
EZ-WS-02	50	30	100	34	M 6	10

Application Image



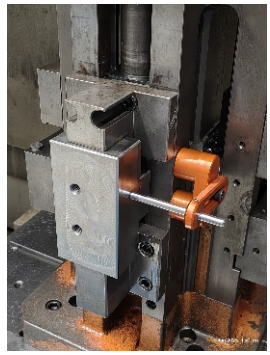

Note : Produce and promoted by AMT

Scope of Application

- Used to hold parts without covering the top surface, allowing full access for milling, drilling.
- Plate machining, mold bases, aerospace parts, aluminium profiles
- Ideal for precision machining, CNC setups, milling tables, or modular fixturing systems.

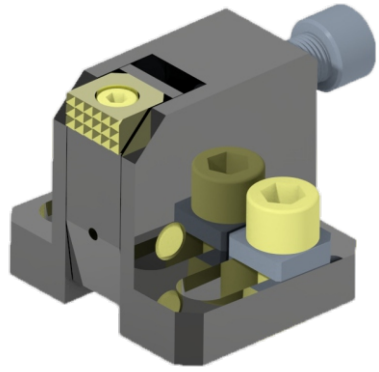

Product Feature

- A pivoting edge clamp is a versatile and functional tool used in woodworking, metalworking, and other crafting projects where precise holding or clamping of materials is required.
- The pivoting action allows the clamp to easily adjust to varying angles or positions, offering greater flexibility compared to standard edge clamps. This feature ensures a secure grip regardless of the angle of the work piece.
- The clamp has a pivoting head that allows it to securely hold materials at various angles or edges. This provides easy adaptation to different work piece orientations, especially useful in projects that require angled or edge clamping.
- A pivoting jaw that exerts clamping force both forward and downward simultaneously

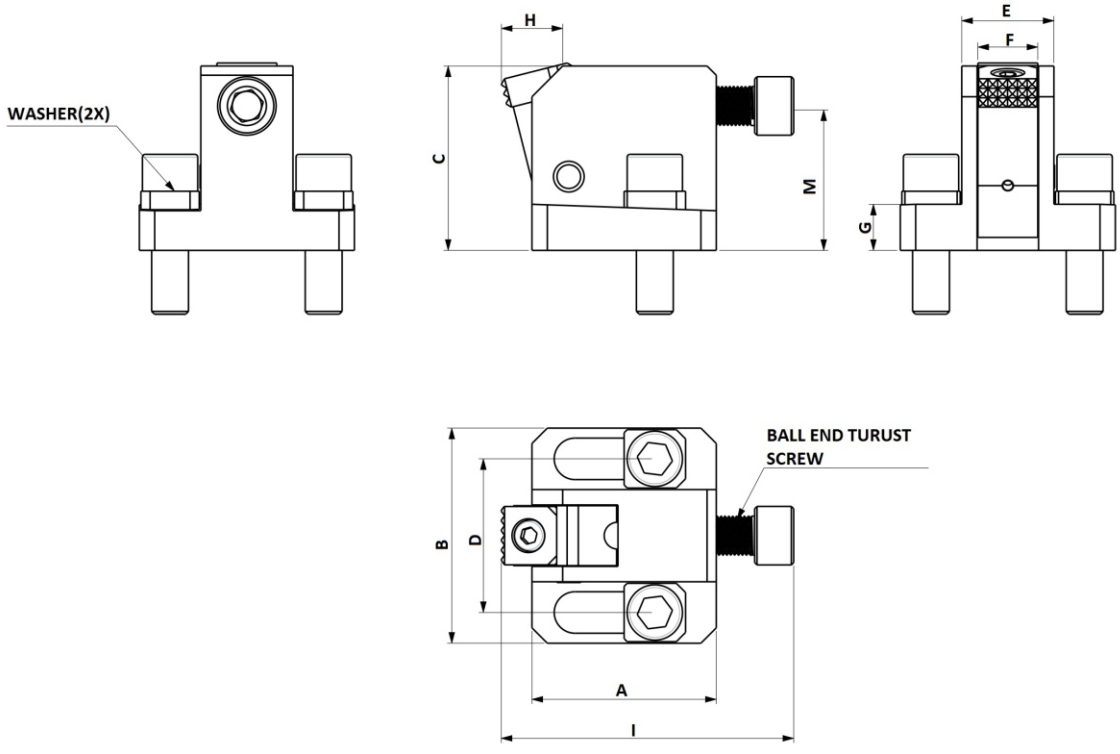

Model No.	A	B	C	D	E	F	G	H	I	M
EZ-PEC-01	60	70	38	50	30	20	25	9.5	87	25
EZ-PEC-02	60	70	60	50	30	20	15	12.7	95	45

Note : Produce and promoted by AMT



MANUFACTURED BY

Productivity Improvement Solutions

AHIRE MACHINE TOOLS PVT. LTD.

Corp. off. D-1/18, MIDC Ambad, Nashik-422010, India.

Works: Phoenix industrial park, shed no. E,gate no. 47, mauje wasali, Nashik-422007

M: (+91) 9096003430 /(+91) 9011038331

www.amtplindia.com I chetan.sawant@amtplindia.com I ronak.sonawane@amtplindia.com

Version JUNE 2025